POWDERED COAL AS A FUEL

BY

C. F. HERINGTON

Mechanical Engineer

SECOND EDITION, REVISED AND ENLARGED

124 ILLUSTRATIONS

NEW YORK
D. VAN NOSTRAND COMPANY
EIGHT WARREN STREET
1920

PRINTED IN THE U. S. A.

PREFACE TO SECOND EDITION

In the two years that have elapsed since this book made its appearance, powdered coal has taken its place as the most promising fuel, bar none, in the industrial heating operations of the day.

Town Councils in England have spent time and money in investigating the possibilities of this fuel and are equipping their Municipal Lighting and Power Plants with powdered coal systems.

France has installed several large plants for use in her metallurgical works and under boilers with excellent results.

Italy has sent several engineering committees to this country to investigate the successes ascribed to powdered coal.

Japan has investigated and is convinced that in order to save her relatively small supply of coal, it must be burned in pulverized form. Japan has given several large orders for equipment during the past year.

The writer, having spent the past three years in investigating the economies effected and the wide and various uses to which this fuel can be applied and in erecting and operating plants under all conditions, now desires to bring before an interested engineering public the results that have been achieved with this really marvelous fuel.

In preparing this, the second edition, the author wishes to extend thanks to the following firms and gentlemen for their able assistance in this work:

Fuller Engineering Company, Mr. H. G. Barnhurst; The Bonnot Company, Mr. A. A. Holbeck; Pulverized Fuel Equipment Corporation, Mr. H. D. Savage; Mr. R. E. H. Pomeroy; Mr. A. G. McGregor and Mr. John Dahlstrom.

C. F. H.

July, 1920.

PREFACE TO FIRST EDITION

In placing this book before the engineering public, the author, who obtained much of the information herein presented while employed as Assistant Engineer in the office of the New York Central Railroad Company, wishes to give due acknowledgment for valuable aid rendered to the firms and individuals named below:

The Fuller-Lehigh Car Wheel and Axle Company
The Bonnot Company
The Ruggles-Coles Company
The General Electric Company
The Webster Mfg. Company
The Raymond Bros. Impact Pulverizer Company
The American Locomotive Co.
The Jeffrey Mfg. Company
The Aero Pulverizer Company
The Link Belt Company

Prof. R. C. Carpenter
Mr. A. A. Holbeck
Mr. H. Barnhurst
Mr. James Lord
Mr. J. H. Van Buskirk

Thanks are to be given to Mr. J. E. Muhlfield and the Pulverized Fuel Equipment Corporation, for their assistance in furnishing cuts and data in the application of powdered coal to locomotives.

Various patents, designs, and systems are here described, but the author wishes to emphasize the fact that comparisons have been made without bias and claims considered without prejudice. The underlying object has been not to advertise the advantages of any one system, but to show the merits of all.

C. F. H.

October, 1917.

CONTENTS

LIST OF ILLUSTRATIONS

POWDERED COAL AS A FUEL

CHAPTER I

POWDERED COAL—INTRODUCTORY

Coal is the staple fuel of the metal-working industries because of its wide distribution and fairly stable price. It may be secured from several sources by almost every consumer and the coal industry is so widely controlled as to lead, generally, to favorable prices.

Powdered coal must compete with raw coal, fuel oil, and industrial gas. The elementary factor in such competition is the B.t.u. cost. If a gallon of oil containing 140,000 B.t.u. costs five cents, then the B.t.u. derived when one cent is spent for fuel oil will be 28,000. If powdered coal containing 14,000 B.t.u. per pound can be purchased for one-half cent per pound or ten dollars a ton, then there are 28,000 B.t.u. obtained for each cent expended to buy coal. The two fuels are then on a parity so far as B.t.u. cost goes, but any final analysis must consider also the comparative efficiencies in the furnace of the two fuels. If a cent's worth of coal will go farther; that is, last longer, or produce more, in a given furnace than a cent's worth of oil (even though both are represented by the same number of B.t.u.), then the coal is to be preferred.

Fuel oil fluctuates sharply in price and tends to become more expensive as demand increases. The same statement is true of natural gas. It is not true to anything like the same extent for coal. Raw coal can not be compared with powdered coal with respect to efficiency of combustion. With proper appliances and methods, the last produces an almost smokeless fire with a steady, intense heat and maximum furnace temperature.

It is true that the number of powdered coal plants is still small. Some of them have been in service for ten to fifteen years and these have fully demonstrated the feasibility and efficiency of a powdered coal installation. Fully 90 per cent of the Portland cement made in the United States is burned in kilns in which powdered coal is the fuel. The change from other fuels to powdered coal does not involve expensive furnace reconstruction. Any furnace adapted for fuel oil or gas may with slight changes be utilized for powdered coal.

The fuel to be used for pulverizing should be bituminous or semi-bituminous, either the slack or the run-of-mine. Coals rich in volatile matter are to be preferred. An advantage of slack over run-of-mine is that with the former no preliminary crushing is necessary. The following analysis represents a dried coal that has been found to give good results:

	Per Cent
Fixed carbon	54.00
Volatile matter	32.75
Ash	12.00
Moisture	1.25

GENERAL OPERATION OF POWDERED COAL PLANT

If not already in fine particles, the coal as received is crushed so as to pass through a $\frac{3}{4}$-in. ring. It is then dried in a direct-heat contact drier. The cost of the drying is appreciable, but this operation is absolutely necessary in order to permit of good pulverizing. Usually the percentage of moisture is reduced to about 1.0. The expenditure of heat for the drying operation is not a net loss since no fuel of any kind ever burns in a furnace until the moisture contained therein has been evaporated.

Following the drying, the coal is pulverized in some one of the various types of grinder or mill, described in later chapters. It is made so fine that about 85 per cent will pass through a 200-mesh screen and about 95 per cent through a 100-mesh screen. A separating device is usually integral with the pulverizer. This carries off the finer particles while returning the grosser for regrinding.

The finely ground coal is now carried to bins from which it is fed to the furnace as required. The furnace construction and operation must be such that the lining remains continuously hot; which implies a steady, uniform feeding of the coal. This feeding must be under positive control, along with which must go a positive control of the air supply. The fire is started by lighting a piece of oily waste, placing it before the burner and turning on the coal. As is the case with fuel oil, the combustion is not very efficient until after the furnace is warmed up.

COMPARISON OF COSTS, FUEL OIL, WATER GAS AND PULVERIZED COAL

The following approximate figures are intended to show under the assumed conditions the relative costs for installation and operation of the three kinds of equipment named. It is assumed that there are 45 furnaces and that the heat consumption is 9,100,000,000 B.t.u. per month.

The assumed heat consumption is equivalent to 65,000 gallons of oil of 140,000 B.t.u. per gallon or to 650,000 pounds of coal at 14,000 B.t.u. per pound. For the gas plant it will be assumed that each cubic foot of gas contains 474 B.t.u. and that 20 cu.ft. of gas are produced per pound of coal. Then the coal consumption per month for making the gas is $9{,}100{,}000{,}00 \div (20 \times 474) = 960{,}000$ lb.

This corresponds with a gas-making efficiency of 0.68, which of course cannot be realized when only water gas is made. If, however, both producer gas and water gas are furnished from the same plant, the combined efficiency may be as high as that assumed. The producer gas will then be used for low-temperature work and the water gas in furnaces requiring high temperature.

1. *Fuel Oil, First Cost of Plant*

Three 10,000-gal. storage tanks at $850	$2,550.00
Unloading, excavation, and setting tanks	900.00
Two auxiliary pressure tanks in place	2,000.00
One circulating pump and motor	150.00
Piping, fittings and valves	5,000.00
Steam and air connections to tanks	1,500.00
Connections to furnaces, 45 at $50	2,250.00
Standpipes for tank cars	150.00
Pump and pump house	500.00
Blowers, motor and blast connections	5,000.00
Total	$20,000.00
Contractor's profit, 15 per cent	3,000.00
	$23,000.00
Engineering and contingencies—10 per cent	2,300.00
	$25,300.00

2. *Water Gas, First Cost of Plant*

Gas plant machinery erected in place	$45,000.00
Building, complete with foundations	20,000.00
Coal trestle, hoppers with siding	6,500.00
Gas piping, meters, valves, water piping	12,500.00
Changes in furnaces	4,000.00
Total	$88,000.00
Contractor's profit, 15 per cent	13,000.00
	$101,000.00
Engineering and contingencies, 10 per cent	10,000.00
	$111,000.00

With regard to the powdered coal plant, two types of apparatus will be considered. The first is that in which screw conveyor apparatus is used for distributing the coal, with individual bins, controls and feeders at each furnace. Another type of plant (see Chapter IV) is that in which the coal dust is carried to the various furnaces by means of low-

3. *Powdered Coal, Screw Conveyor Plant, First Cost*

Pulverizing machinery	$12,000.00
Buildings and foundations	6,000.00
Machinery foundations	2,000.00
Coal trestle and track siding	6,500.00
Conveyor system to the furnaces	11,500.00
Walkways and conveyor supports	6,000.00
Motors and wiring for conveyors	8,000.00
Burners and controllers for 45 furnaces at $250	11,250.00
Furnace changes, stacks	4,250.00
Furnace bins, 45 at $100	4,500.00
Hoods and exhaust system complete	6,000.00
Stack thimbles through roof	1,000.00
Total	$79,000.00
Contractor's profit, 15 per cent	12,000.00
	$91,000.00
Engineering and contingencies, 10 per cent	9,000.00
	$100,000.00

4. *Air Distributing System, Powdered Coal, First Cost*

Pulverizing Machinery	$12,000.00
Buildings and foundations	6,000.00
Machinery foundations	2,000.00
Coal trestle, etc	6,500.00
Spiral riveted pipe, fittings and valves	8,500.00
Furnace changes	2,500.00
Blowers, motors and wiring	8,000.00
Hoods and exhaust system complete	6,000.00
Total	$51,500.00
Contractor's profit, 15 per cent	7,725.00
	$59,225.00
Engineering and contingencies, 10 per cent	5,925.00
	$65,150.00

pressure air which conveys it in suspension from a central storage bin (Holbeck system).

Against these installation costs for the four types of plant, we now tabulate the annual operating costs, including fixed or overhead charges:

Operating Cost of Fuel Oil Plant

Fixed Charges:		
Interest, 5 per cent of $25,300	$1,265.00	
Depreciation, 10 per cent	2,530.00	
Taxes and insurance, 1 per cent	253.00	$4,048.00
Operation:		
Oil, 780,000 gal. at 4.6 cents per gallon	$35,880.00	
Labor, two men	2,000.00	
Electrical current, air and steam	720.00	
Repairs, 2 per cent of the cost	500.00	$39,100.00
		$43,148.00

Operating Cost of Water Gas Plant

Fixed Charges:		
Interest at 5 per cent of $111,000	$5,550.00	
Depreciation at 10 per cent	11,100.00	
Taxes and insurance, 1 per cent	1,100.00	$17,750.00
Operation:		
Coal, 5760 tons at $2.50	$14,400.00	
Labor, 1 operator and two assistants	2,800.00	
Unloading coal at $1.50 per car	200.00	
Cleaning generators	200.00	
Water	200.00	
Steam	200.00	
Repairs, 2 per cent, of $111,000	2,200.00	$20,200.00
		$37,950.00

Operating Cost of Powdered Coal Plant with Screw Conveyors

Fixed Charges:		
Interest, 5 per cent, of $100,000	$5,000.00	
Depreciation, 10 per cent	10,000.00	
Taxes and insurance, 1 per cent	1,000.00	$16,000.00

Operation:

Coal, 3900 tons at $2.50	$9,750.00	
Labor, 1 operator and two assistants	2,800.00	
Unloading coal at $1.50 per car	100.00	
Electrical current for motors	3,000.00	
Repairs, 2 per cent of cost	2,000.00	$17,650.00
		$33,650.00

Operating Cost of Powdered Coal Plant with Pneumatic Distributing System

Fixed Charges:

Interest at 5 per cent of $65,150	$3,257.50	
Depreciation at 10 per cent	6,515.00	
Taxes and insurance	651.00	$10,423.50

Operation:

Coal, 3900 tons at $2.50	$9,750.00	
Labor, 1 operator and two assistants	2,800.00	
Unloading coal at $1.50 per car	100.00	
Electrical current for motors	1,500.00	
Repairs, 2 per cent of cost	1,140.00	$15,290.00
		$25,713.50

SUMMARY

	First Cost.	Yearly Operation.
Fuel oil plant	$25,300.00	$43,148.00
Water gas plant	111,000.00	37,950.00
Powdered coal plant (screw conveyor)	100,000.00	33,650.00
Powdered coal plant (pneumatic)	65,150.00	25,713.50

More briefly still, we have the following:

	Operating Cost per Ton of Coal Burned.	B.t.u. Delivered to Furnace per 1 Cent of Operating Cost.
Fuel oil	....	25,300
Water gas	$6.60	28,700
Powdered coal (screw conveyor)	8.65	32,500
Powdered coal (pneumatic)	6.59	42,488

CHAPTER II

COALS SUITABLE FOR POWDERING

Powdered coal weighs 38 to 45 lb. per cubic foot, although the solid particles have a specific gravity between 1.3 and 1.35. The free surface of a pile at rest makes an angle of 34 to 38 degrees with the vertical, if dry. These properties do not vary much with the grade of coal.

EXPERIENCE WITH VARIOUS GRADES OF COAL

The impression has prevailed until recently that only bituminous coals were suitable for powdering.

Bituminous, or soft coal, differs from anthracite in its greater proportion of volatile content. The greater the percentage of volatile constituents in coal, the more readily will it deflagrate. These volatile gases distill from the fuel and ignite at a temperature much lower than that required for carbon itself. To burn them requires a greater relative supply of oxygen than that necessary for carbon. Their average heat value is nearly 50 per cent greater than that of carbon.

The fuels available for burning in Portland cement kilns may have a wide range of quality. The best bituminous coals are preferable, but those of poor quality are occasionally found in successful use. The fuels used in the Eastern portions of the country are generally obtained from the soft coal mines of Pennsylvania and Maryland, Virginia and West Virginia. The coals employed in mills in the West are those most accessible from the plant and cheapest in price on the heat unit basis.

The effort to use low-grade coal has been at once one of the most attractive and elusive features of powdered coal firing. Unsuitable coal, while not always the ultimate cause of failure, has often been the immediate cause for the discontinuance of experiments. While it is possible to burn inferior grades of coal in powdered form, there are often so many complications introduced as to overcome any economy. The idea of using up the extensive anthracite culm piles may have to be abandoned. The particular difficulty with low-grade coals is in the disposal of the slag. Average slag moves very sluggishly at a temperature of 2500° F., and practically all slag solidifies at 1800° or above.

As a single example of the effect of low-grade coal, Mr. W. A. Evans, in a discussion before the Western Engineers' Society, quotes his experience with a malleable iron annealing furnace. "Coal containing about 4 per cent of ash was being used with very satisfactory results. Exact control of the heat was possible throughout the annealing process. A very small amount of slag was deposited in the combustion chamber on a bed of cinders, and this was easily removed every twenty-four hours. One of the officers of the company compared the appearance of the fine powder with that from a cheap slack coal that could be bought for about half what the good coal was costing, and he insisted upon the use of the cheaper coal. It did not take long to demonstrate the unavailability of the substitute. Slag deposited rapidly in the combustion chamber and frequent opening of the furnace front was made necessary in the effort to remove it. The result was that the furnace would cool down. The saving in cost of fuel was soon overcome by complications and ruined castings."

It is desirable to use the very best coal obtainable, when working out a new problem. The trial of cheaper coal can be undertaken when other details have been perfected.

EXPERIMENTS

In the Engineering and Mining Journal of 1876, Chief Engineer B. F. Isherwood, U.S.N., described a test made by naval engineers under his direction in 1867 and 1868 at

South Boston, Mass., with both anthracite and semi-bituminous coals, in commercial and powdered forms. The highest rate of combustion attained was 13.8 lb. per square foot of grate per hour for the anthracite and 14.9 lb. for the bituminous, referring all coal, powdered as well as solid, to the grate area. Mr. Isherwood's conclusions were that, including the cost of pulverizing, the anthracite did a great deal better and the semi-bituminous a little better, when burned upon the grate in the ordinary way, than when burned in the powdered condition.

The powdered coal used under a Bettingdon boiler which gave an efficiency, under test, of 82.6 per cent, contained 2.15 per cent of moisture, 22.8 per cent of volatile matter, 57.55 per cent of fixed carbon and 17.5 per cent of ash. A number of these boilers (see Chapter VIII) are in use in South Africa, Great Britain and Canada.

For metallurgical furnaces, the practice of the American Iron and Steel Co. of Lebanon, Penn., indicates that the volatile content should be not less than 30 per cent. A typical coal used by them analyzed 1.12 per cent moisture, 33.2 per cent volatile, 56.07 per cent fixed carbon and 9.61 per cent ash. The American Locomotive Co., at Schenectady, N. Y., uses in its drop forge furnaces a coal high in volatile matter, low in ash, and dried until it contains not over $\frac{1}{2}$ of 1 per cent of moisture. In a reverberatory furnace, the Canadian Copper Co. employs a good quality of slack. Analysis of one lot showed: volatile matter, 34.70; fixed carbon, 55.40; ash, 9.45; sulphur, 1.30; moisture, 4.31 per cent. This coal has a thermal value of about 13,500 B.t.u. per pound.

One of the most severe tests yet made was with a semi-bituminous coal from Brazil, analyzing as pulverized:

	Per Cent.
Moisture	from 2– 8
Volatile	from 14–28
Fixed carbon	from 58–34
Ash	from 26–30

The sulphur averaged from 3 per cent to 9 per cent and the B.t.u. from 10,900 to 8,800. No difficulty whatever was experienced, according to Mr. J. E. Muhlfeld, in maintaining maximum boiler pressure when working a locomotive with this fuel under the most severe operating conditions. The ash and sulphur contents in this instance are strikingly abnormal and adverse to good operation. A more usual coal for locomotive practice is mentioned by Mr. Muhlfeld as having been employed on an Atlantic type passenger locomotive. This was a Kentucky unwashed screenings testing 2.46 per cent moisture, 36.00 per cent volatile, 54.00 per cent fixed carbon, 0.78 per cent sulphur and 7.94 per cent ash. It contained 13,964 B.t.u. per pound.

In Muhlfeld's experiments on locomotives, described in the Journal of the American Society of Mechanical Engineers for December, 1916, mixtures ranging down from 75 per cent run-of-mine bituminous and 25 per cent anthracite birdseye (over $\frac{1}{16}$ in. and through $\frac{5}{16}$ in.) to 40 per cent of the former with 60 per cent of anthracite culm, were burned with equally satisfactory results. The average composition of the coals referred to is shown in the following table:

Item.	PULVERIZED.		
	Bituminous Run-of-Mine.	Anthracite.	
		Birdseye.	Culm.
Moisture, per cent	0.50	0.50	1.00
Volatile, per cent	29.50	7.50	6.00
Fixed carbon per cent	60.00	77.00	71.00
Ash, per cent	10.00	15.00	22.00
Sulphur, per cent	1.50	1.00	2.50
B.t.u. per pound	13,750	12,750	11,250
Fineness, per cent through 200-mesh	86.00	86.00	86.00

Satisfactory results are also reported from powdered lignite having an analysis of: moisture, 1.8 per cent;

volatile, 47.0 per cent; fixed carbon, 41.0 per cent; sulphur, 0.75 per cent; ash, 9.5 per cent; with a heat value of 10,900 B.t.u. per lb.

Mr. Muhlfeld claims that the use of powdered anthracite culm will double the steam-generating capacity of stationary boilers now burning birdseye anthracite, hand-fired on grates; and at the same time eliminate fire cleaning, greatly decrease the amount of ash to be handled, and reduce the boiler-plant-labor cost about 40 per cent. He has employed birdseye containing 7 to 9 per cent volatile and 19 to 22 per cent ash, and culm containing 6 to 10 per cent volatile and 22 to 46 per cent ash, in tests on a 463 horsepower Stirling water-tube boiler, with the following results:

Test No.	1	2	3	4	5	6	7
Duration, hours	72	336	24	48	120	240	24
Horsepower rating	463	463	463	463	463	463	463
Horsepower developed, %	133	135	147	178	112	118	124
Fuel:	Anth.	Anth.	Anth.	Anth.	Anth.	Anth.	Anth.
Kind	B'eye	B'eye	B'eye	B'eye	Culm	Culm	Culm
Dryness, per cent	0.65	0.65	0.65	0.65	0.8	0.8	0.8
Fineness, per cent through 200-mesh	86.0	86.0	85.0	86.0	88.0	86.0	88.0
Evaporation, from and at 212° F., lb.	8.7	8.9	9.6	9.8	7.8	8.1	8.5
CO_2, average per cent	16.6	16.3	15.9	16.6	16.2	16.5	16.7
Vacuum in breeching uptake, in. of water	0.25	0.23	0.22	0.23	0.27	0.28	0.27
Vacuum in combustion chamber, in. of water	0.16	0.14	0.13	0.16	0.17	0.19	0.15
Boiler pressure, average lb.	140	142	141	140	143	144	145
Flue-gas temperature, deg F., average	518	525	496	603	475	580	576

SUMMARY

Most of the experience hitherto obtained has been on high grade, highly volatile, soft coals, and efforts to burn inferior grades have often led to disappointment. It is in recent practice, and in the hand of only a few investigators, that good results have been obtained from inferior soft coals and from anthracite. All of the most recent developments for steam generation have been made with anthracite culm, at one time definitely abandoned as a suitable fuel for powdering. Powdered coal, like ordinary commercial coal, should be practically free from sulphur, for all but the most exceptional applications.

THE ASH QUESTION

The presence of inert impurities in the fuel has not much effect. Only combustibles will burn; the combustibles, if inert, do not necessarily affect the operation of the furnace. Their effect is in the reduced amount of useful work obtained from a dollar's worth of fuel. Coal has been burned which contained up to 52 per cent of ash. Good performance depends not so much on the per cent of ash or the heat value of the fuel as upon dryness, fine grinding, a hot fire box and proper air supply. One authority goes even so far as to say that any solid fuel that, in a dry pulverized form, has two-thirds of its content combustible, is suitable for steam-generating purposes. " Domestic and steam sizes and qualities of anthracite, bituminous, and semibituminous coals, and lignite and peat, as well as the inferior grades such as anthracite culm, dust and slush, and bituminous and lignite slack, screenings and dust, are all suitable for burning in pulverized form."

But while the absolute *amount* of ash in coal may have only minor influence on its suitability for use when powdered, the *quality* of the ash is all-important.

With the ordinary method of burning coal under a steam boiler, the grate (with its bed of solid incandescent fuel more or less encumbered with ash and clinker) offers a considerable, a varying and an irregularly distributed resistance to the passage of air, rejects the incombustible residuum with some difficulty and allows some of the unburned fuel to sift to the ashpit or to be fused in with the clinker. With powdered coal, burned in suspension, many of these difficulties disappear. There still remains, however, the difficulty of getting rid of the incombustible. With 10 per cent of ash there will be 200 lb. of refuse to be disposed of, for each ton of coal burned. If this ash is kept in a pulverized form it is carried into the back connection, the tubes and stack, and scattered about the neighborhood. If it is *fused*, an even more serious difficulty may arise. The clinker then attaches itself to the surface of the furnace and welds itself into large masses. This may occasion damage to the brickwork when the clinker is removed and necessitates comparatively frequent lay-offs for cleaning. In one instance, the molten slag formed in ridges and sheets upon the sides and in stalactites upon the roof of the furnace, while the floor was covered with a plastic mass, which cooled when the door was opened for its removal, and could scarcely be withdrawn without material damage to the furnace.

According to Muhlfeld, clinker is of two kinds: " hard " and " soft." " Hard clinker " is formed by the direct melting of some of the ash content. It hardens as it forms and usually gives but little trouble. " Soft clinker " is formed by the slagging of the ash and is either pasty or fluid and steadily grows in size. " Honeycomb " or " flue-sheet clinker " is formed by the condensation or coking of tarry matter or vapor as it strikes against the fire-box sheets, and results in the accumulation of a relatively soft, light, ashy substance that grows or spreads over certain of the refractory or metal parts of the furnace.

A common source of trouble is the ferric sulphide (iron pyrites, FeS_2) in the ash. This is reduced to ferrous sulphide (FeS) in the furnace. The latter substance melts at about 2300° F. and forms a pasty mass. If subjected to high heat and an excess of air, it forms Fe_2O_3, ferric oxide, which combines with the silica present in the ash to form a relatively harmless infusible clinker. If the supply of oxygen is insufficient, on the other hand, the ferric sulphide becomes ferrous oxide, FeO, which when combined with silica produces the troublesome honeycomb. Proper adjustment of combustion conditions to suit the fuel used will therefore help to mitigate clinker difficulties. Generally speaking, silica, alumina and magnesium decrease the fusibility of ash; while iron, lime, potassium and sodium tend to increase its fusibility.

The ash question is usually less serious in metallurgical applications. At the furnace of the Canadian Copper Co., referred to in Chapter VI, the ash from the coal causes very little trouble in operation. A small amount settles on the slag, but as the ash contains considerable amounts of iron, this is not an undesirable feature. A small quantity also settles in the flue and a few hundred pounds may stick around the throat. Where exposed to high heat, the ash forms a very light pumice-like fragile mass. The throat is cleaned out daily by opening the door under the flue. During the cleaning the firing is maintained as usual.

The possible influence of coal composition on the analysis of furnace product is suggested in the following table, which compares results obtained in the same furnace with fuel oil and powdered coal:

Analysis of Slag.	Per Cent.	
	Oil.	Coal.
SiO_2	16.0	16.5
FeO	22.0	18.2
MnO	7.4	6.7
P_2O_5	1.7	1.9
Final analysis of the steel:		
Sulphur	0.025–0.035	0.035–0.04
Sulphur in coal	1.0–1.15	

There appears here to be no more difference than would naturally occur daily from variations of charge and fuel.

In the experience of the General Electric Company, at Schenectady, N. Y., with a wide range of metallurgical operations, slag and clinker gave no especial difficulty. In steam generation, they became serious factors only under heavy boiler loads, say 40 per cent above normal, and indicated the necessity of care in designing and operating boiler furnaces. "With powdered coal, furnace temperatures are high; 2700° F. or more is not uncommon and most of the ash will slag when hot. It was aimed at Schenectady to slag as much as possible, drawing off the fused product at intervals. Fine ash passes on among the tubes. The slag weighs 5.72 per cent and the soot 3.41 per cent of the coal that made it. This coal gives 11.26 per cent of ash in the laboratory, so that 2 per cent must have gone up the stack. This 2 per cent is a very fine white powder, scarcely visible at the chimney top. The slag, which weighs 114 lb. per ton of coal fired, contains no carbon whatever. At moderate loads, say up to 180 per cent of normal, it is drawn out once during the day to a concrete pit containing water. The pit is cleaned out with pick and shovel the next morning. This is not the easiest way to handle slag. If there were a cellar beneath the boiler room there would be less labor, but even as it is the work is not difficult. Water in the pit is essential however.

"With heavy loads, some particles of slag travel with the gas current and cling to the first cold surface they meet; that is, to the bottom row of tubes. If this slag is allowed to accumulate for ten hours, it will choke off enough of the gas passage to make reduction of load necessary. This was a great difficulty at first, but it has been overcome. The accumulation can be blown off with a steam jet once during the forenoon and again in the afternoon. This does not call for much time and is not laborious. Further improvement has been made by admitting a little steam at the inlet end of the gas passages. This steam travels with the hot air, mingling with it and altering the character of the fire; it makes slag run more freely, softening and decreasing the quantity that clings to the tubes. It pays to blow tubes once a day. Most of the soot goes over through the second pass of the boiler and drops in the back chamber. The bottom of that chamber has been paved, giving it a pitch, with a drain pipe leading to a pit, and all this material is washed out every second day by merely opening a valve. The soot, however, is a loss; for 60 per cent of it is carbon; that is, 60 per cent of 3.41 per cent or 2 per cent of the coal is unburned. The soot is light and fluffy, weighing 18 lb. per cubic foot. No good use for it has been found thus far."

Trouble from ash in metallurgical operations may arise in the combustion chamber, on the hearth, or in the flues. In the combustion chamber, slag can be provided for by the use of a bed of cinders, which will remain loose and can be pried out. On the hearth of a reverberatory furnace the ash forms a slag which can be drawn off with other impurities. In the gas flues, control of the heat should be such as to keep the temperature too low to permit the formation of slag. In any case, frequent and easy access should be given for cleaning. Checker work is, according to one authority, entirely unsuitable for the use of powdered coal. It will slag up and become inoperative.

In locomotive applications, the liquid ash runs down the under side of the main arch and the front and sides of the forward combustion zone of the furnace and is precipitated into the self-cleaning slag-pan. Here it accumulates and is air-cooled and solidified into a button of slag which can be dumped by opening the drop bottom doors.

SUMMARY

Ash disposal presents problems different from those encountered with ordinary coal. They are to be handled by proper selection of fuel (giving attention to the composition of the ash), by control of combustion, by running off liquid slag and by the mechanical or manual cleaning of surfaces where powder or clinker may accumulate.

CHAPTER III

PREPARATION OF POWDERED COAL

Having selected a proper grade of coal, usually one containing in the neighborhood of 30 per cent of volatile matter, the first operation is generally a crushing to about 1-in. size.

Fig. 1 shows the Jeffrey single roll crusher. It is so constructed as to withstand the severe usage to which it is likely to be subjected, being built for strength and endurance rather than with any over-refinement of parts.

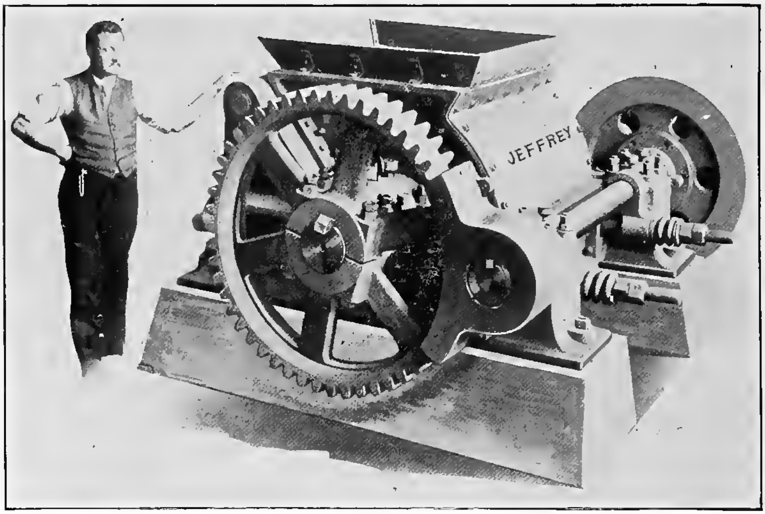

Fig. 1.—Jeffrey Single-roll Crusher.

The machine consists of a heavy cast-iron frame, in which are mounted a crushing roll and a breaker plate. The breaker plate is hinged at its upper end and is held in position by a pair of adjusting rods at the lower edge. By this means the clear opening between the breaker plate shoe and the surface of the roll can be varied to give any size of product required.

A clamping effect is produced by proper adjustment of the cross-rod bolts between the side frames, whereby sufficient friction may be brought upon the hinged breaker plate to eliminate chattering and to assist the safety device.

The concave breaker plate acting in conjunction with the roll makes a form of maw, with a very small angle of repose; hence the machine will readily grip a large lump and reduce it to such size as will pass through the opening between the roll and plates. A countershaft, mounted directly on the machine, drives the roll through a pair of gears. These are made so heavy that sufficient torque is obtained to start the roll under all conditions of load. The machine cannot become overloaded or clogged up under any volume of coal. It makes the entire reduction in a single operation.

The driving pulley is not keyed to the shaft, but is mounted on a separate hub which it drives through a set of wood pins inserted in holes in the arms of the pulley. When any undue strain comes on the machine from any cause, these wood pins shear off, and the roll stops while the pulley keeps on revolving. There is thus formed an efficient safety device preventing accidents to workmen. After the cause of the trouble has been removed, new wood pins put the machine again in operative condition.

A pair of heavy springs is placed on the tension rods. These springs do not move under ordinary working conditions; but when an undue pressure comes on the breaker plate, they act as a cushion, yielding slightly, taking up the inertia of the parts and allowing time for the pins to shear without breaking more important elements of the machine.

Fig. 2 shows the " S–A " improved coal crusher, fitted with the patented toggle spring release, which gives maximum pressure between the rolls when they are in normal operating position. On the ordinary spring type of crusher the pressure is weakest when the rolls are in normal operating position. The two types of crusher operate in exactly opposite ways. Since the pressure between the rolls decreases as the rolls are separated, pieces of iron or other hard material will not injure the rolls of the " improved " type of crusher as they do the rolls of the ordinary machine. The pressure between the rolls is regulated by nuts that are easily accessible.

Following the crushing, the coal may be carried (often by belt conveyor and elevator) to a magnetic separator like the Ding " magnetic pulley," which removes any iron or steel scrap, nuts, pick points, pieces of iron, bolts, etc., that would interfere with pulverization.

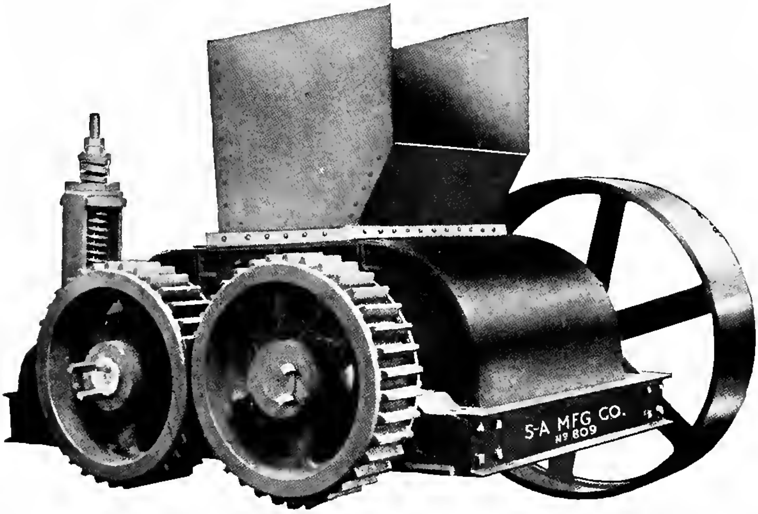

Fig. 2.—S-A Improved Coal Crusher.

The coal, before pulverizing, should be well dried, down to 1 per cent or less of moisture. This makes it pulverize better and burn more freely. Coal does not grind well if moisture in excess of this is present. Nothing is lost by drying it separately. In burning coal, the moisture, free or combined, must be disposed of either in the process of preparation or at the moment of combustion. In the latter case, not only is the efficiency of the furnace lowered by the calorific investment in the superheated steam passing out as a product, but the temperature of the furnace is lowered materially. Drying wet coal in the furnace itself is doing this necessary part of the work in the most expensive place and at the sacrifice of temperatures which may be essential to the industrial process.

In the practice of the American Iron and Steel Co. (see Chapter VII), attention has been given the possibility of using undried coal. In all cases, it was finally deemed best to provide for drying. The drying equipment may be arranged for intermittent use, if apparatus of standard size is too large for the required quantity and moisture condition of the coal available.

First cost so often enters into the selection of apparatus that a number of plants without dryers have been introduced with fairly good results, maintained even when the coal contained as much as 15 to 20 per cent of water.

Mr. Lord of the American Iron and Steel Co. described a visit to an installation in Iowa at a time when there was deep snow on the ground. Into this snow the coal was shoveled after dynamiting it out of the car. It was then elevated, snow and all, to the coal hoppers over the pulverizing machines. There was never any difficulty in the operation nor any trouble in maintaining the flame, but the procedure was certainly not favorable to good economic results. It was estimated that about 20 per cent more coal was used in the furnaces than would have been consumed with adequate drying facilities: and the power consumption for pulverizing was considered to be about 50 per cent in excess of normal.

The only reason for using wet coal is the desire to keep down the initial investment; and even at that, says Mr. Lord, there must exist the assurance of commercially dry coal for the greater part of the time, i.e., coal carrying moisture under 5 per cent. Provision should be made for protection from the weather as much as possible both at the plant and in transit. One concern ships its coal in box cars. Storage will drain off some moisture, but slack coal will retain 15 per cent of moisture indefinitely, unless stirred up and brought in contact with air.

Where wet coal is used, and in all low-temperature applications, an igniting flame must be provided. In the installation just referred to this is accomplished by a grate fire in a steel box 18 in. square and 5 ft. long, and 12 in. square inside the brick lining. The powdered coal blowing through this small box comes in contact with the grate fire flame and hot brick walls and ignites readily. The coal on this grate is replenished by particles dropping from the powdered coal as it blows through. The powder which falls on the grate forms coke and burns freely. Attention is required only once in twenty-four hours for cleaning and raking out.

The possible elimination of the dryer is further limited to those cases where a type of grinding machine is used that will handle moist coal. Pulverizers using screens for the separation of the coarse and fine material clog up immediately when fed with moist coal.

THEORY OF DRYING

To dry a stated weight of any material a definite number of heat units must be used; first, to raise the temperature of the material to 212°; second, to raise the temperature of the total amount of water contained in the material to 212°; and third, to evaporate such part of the water as may be desired. The total number of heat units may be calculated from the specific heat of the material, the initial and final percentages of moisture and the initial temperature.

If then the heating value of the fuel used for drying and the thermal efficiency of the apparatus are known, the quantity of fuel required for any capacity may be determined.

When the composition of fuel is known, we may then compute how much air is theoretically needed to burn it. The resulting temperature of combustion, however, would be much too high for dryer operation. A large excess of air must be introduced, to bring the temperature of gases down to about 1400° F., at which temperature they enter the gas passage of the dryer. This comparatively high temperature is quickly reduced by the transfer of heat through the steel shell to the drying coal. When these gases have reached the delivery end they may be at a temperature of about 250° F. If (as in some forms of machine) they then pass back through the cascading coal, they are still further reduced in temperature, and may finally leave the fan at about 100° F. In cooling, the gases are greatly reduced in volume; so that the velocity through the shell is decreased to such a point that comparatively little dust is carried off.

Indirect-fired Rotary Coal Dryer. The Fuller-Lehigh indirect-fired coal dryer (Fig. 3) consists of an axially inclined cylindrical shell fitted with rollers and gearing which rotate the shell on its longitudinal axis. The higher end of the dryer shell terminates in a brick housing which serves to support the stack required to discharge the waste products of combustion of the dryer furnace, including the

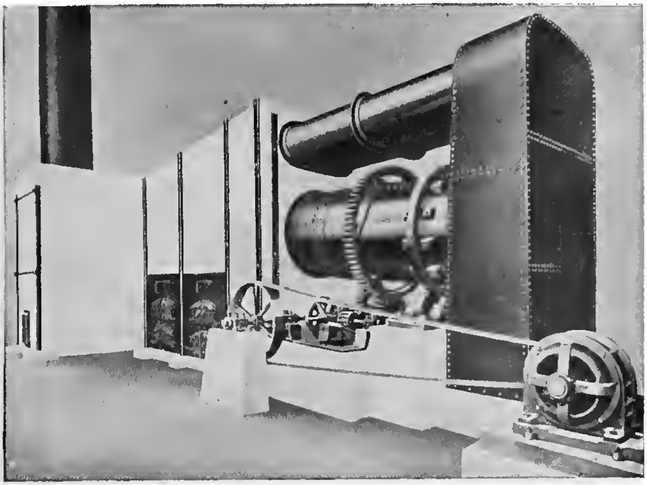

FIG. 3.—Fuller-Lehigh Indirect-fired Dryer.

water vapor given off by the moist coal. The furnace for heating the dryer is placed between the stack chamber and the hood. The furnace may be provided with a large combustion chamber through which the dryer shell passes. The entire furnace is built of brick and the walls are securely bound together by means of buckstays and tie rods.

The moist coal is fed into the dryer shell through a feed spout located in the stack chamber. This spout enters the dryer shell and delivers the coal close to the bottom. A series of longitudinal shelves fastened to the inside of the dryer shell lifts the coal and drops it through the current of heated air passing through the inside of the dryer shell. Since the revolving shell of the dryer is slightly inclined downward toward the discharge end, the coal travels the entire length of the shell and is finally discharged from the lower end.

The hot gases from the furnace circulate around the outside of the dryer shell, passing through the combustion chamber of the furnace. They then leave the combustion chamber through the horizontal breeching and enter the top of the hood at the lower end of the dryer. From this hood the hot gases flow to the interior and come in direct contact with the coal in the dryer shell. After they pass through the interior, the hot gases enter the stack chamber at the upper end of the dryer, and then escape to the atmosphere through the stack.

No flame comes in direct contact with the coal being dried, and there is absolutely no possibility of the coal's taking fire during its progress through the dryer shell. No fans are used in connection with this type of dryer, as the stack draft is sufficient to move the gases at the required velocity.

Ruggles-Coles Dryer. This form of dryer, illustrated in Fig. 4, consists of two long concentric steel plate cylinders which are set with the delivery end slightly lower than the head end. Between the inner cylinder, which acts as a flue for the hot furnace gases, and the outer shell is the space which holds the material to be dried. The two cylinders are rigidly connected midway between the ends, and by placing swinging arms between this center and each end, allowance is made for the unavoidable expansion and contraction due to differences in temperature. Such construction entirely prevents the shearing of rivets or loosening of joints.

The dryer is supported on two steel tires which are rigidly riveted to the outer cylinder. Each tire rests on four bearing wheels made of chilled iron. These are arranged in pairs on rocker arms, which are supported on heavy cast-iron bases. Two large thrust wheels are provided on one of the bases to hold the cylinder tires against the wheels. Set screws allow the bearing wheels to be adjusted while the machine is in operation, so that tires can ride centrally on them without exerting pressure on the thrust wheels.

Distribution of the weight of the dryer on eight bearing wheels, each of which has two bearings, prevents excessive wear or overheating. Riveted to and around the outer cylinder is a heavy gear which engages with a pinion keyed to the driving shaft. This shaft may be located on either side or at the end of the dryer, as may best suit local conditions.

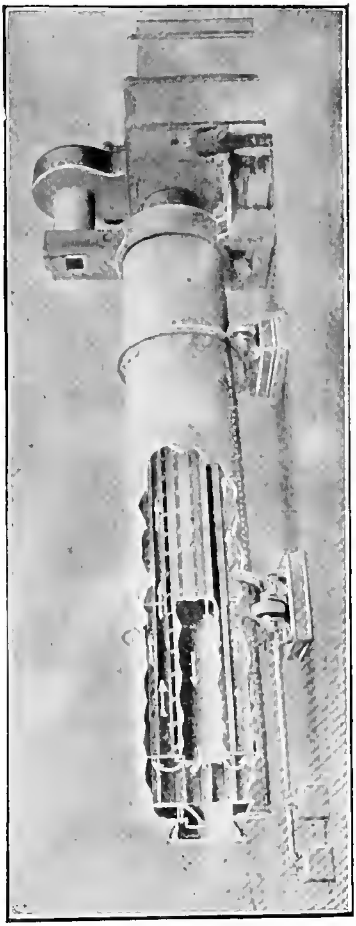

FIG. 4.—Ruggles-Coles Dryer.

Lifting plates are fastened to the inside of the outer shell, running parallel with the axis of the dryer for its entire length. The revolving of the dryer causes these plates to lift the coal and drop it on the hot inner shell. By the inclination of the dryer the coal is carried from the feed end to the delivery end. On the inside of the discharge head at the delivery end there are riveted buckets which discharge the dried coal through a central delivery casting. At the feed end the inner cylinder extends beyond and through the stationary head and connects directly with the flue from the furnace. This inner cylinder forms an extended combustion chamber for the unconsumed gases leaving the furnace. Doors are provided at both ends of the dryer for inspection purposes.

Following the drying, the coal is pulverized to its final degree of fineness. With the best type of machines obtainable for this purpose, the coal and its contained impurities may readily be powdered to such a degree that under screening tests 85 to 90 per cent will pass through an aperture $\frac{1}{400}$-in. square, while the total residuum left upon a screen whose apertures are $\frac{1}{200}$-in. square will be only from 2½ to 5 per cent; and even this residuum would pass through screens $\frac{1}{100}$-in. square. It must be borne in mind that of the quantity passing the apertures $\frac{1}{400}$-in. square there is a high percentage of absolute dust or impalpable powder not commercially measurable. This is proven by the fact that in tests made upon calibrated screens of $\frac{1}{600}$-in. square aperture, over 70 per cent still passed through. It is certainly safe to assume, therefore, that the average volume of particles will be less than that of a cube measuring $\frac{1}{600}$-in. on the side. No determination is made, usually, of fineness below 200-mesh.

The total number of particles resulting fron the powdering of 1 cu.in. of coal to spheres $\frac{1}{200}$ in. in diameter is over 15 million. Simple calculation on this basis shows that while a cubic inch of coal exposes 6 square *inches* for absorption and liberation of heat, the surface exposed for the same purpose by the powdered coal is over 8 square *feet.* Since no fuel burns until it is heated to the temperature at which it develops more heat than it receives, the advantage of this enormous absorbing and delivering surface is apparent. The result of this is shown in the clearness and uniformity of the flame produced. Where coarse particles are permitted to enter the furnace, distinct sparkles are apparent. These larger particles are carried beyond the region of oxygen supply and are for this reason not fully burned.

At the Anaconda plant (see Chapter VI) the grinding is done so that from 93 to 97 per cent will pass through 100-mesh and 79 to 82 per cent through 200-mesh. Coals of high specific gravity will grind finer in an impact pulverizer. In cement work, there is no gain by grinding finer than 95 per cent through 100-mesh. This gives from 75 to 85 per cent through 200-mesh, the percentage depending upon the physical character of the coal. Coal thus pulverized will contain a high percentage of fine dust practically unmeasurable. As there is no difficulty in burning coal thus prepared, there seems to be no good reason for pushing pulverization beyond this point. Coal can be brought to this condition quite cheaply, and the mills able to so this work have large capacity. Higher percentages may be obtained by the sacrifice of capacity, and consequently of grinding economy. The standard of approximately 85 per cent through 200-mesh and 95 per cent through 100-mesh is a practicable commercial standard and should be maintained.

Fuller-Lehigh Pulverizer Mill. In this mill (Fig. 5) the coal is fed from an overhead bin by means of a feeder mounted on top of the mill. This feeder is driven direct from the mill shaft by means of a belt running on a pair of three step cones, which permit operative adjustment. In addition, the hopper of the feeder is provided with a slide, which permits the operator to increase or decrease the amount of coal entering the feeder hopper.

The coal leaving the feeder enters the pulverizing zone of the mill. The pulverizing element consists of four unattached steel balls which roll in a stationary, horizontal, concave-shaped grinding ring (Fig. 6). The balls are propelled around the grinding ring by means of four pushers attached to four equidistant horizontal arms forming a portion of the yoke, which last is keyed direct to the mill shaft. The material discharged by the feeder falls between the balls and the grinding ring in a uniform and continuous stream, and is reduced to the desired fineness in one operation.

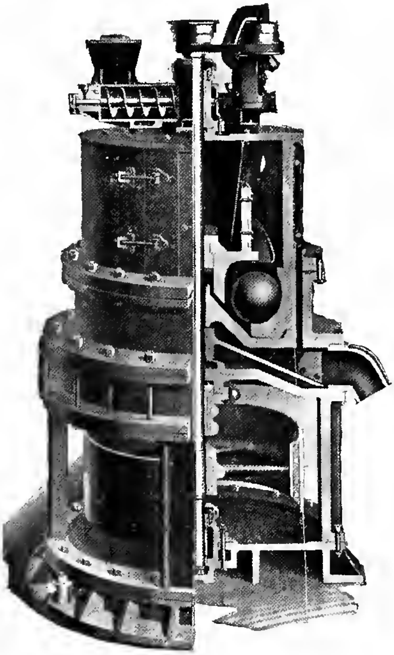

Fig. 5.—Fuller-Lehigh Pulverizing Mill.

Those mills which operate with fan discharges are fitted with two fans. One of these fans is connected in the separating chamber immediately above the pulverizing zone, and the other fan operates in the fan housing immediately below the pulverizing zone. The upper fan lifts the fine particles of coal from the grinding zone onto the chamber above the grinding zone, where these fine particles are held in suspension. The lower fan acts as an exhauster, and draws the finely divided particles through the finishing screen which completely encircles the separating chamber. The coal leaving the separating chamber is drawn into the lower fan housing, from which it is discharged through the discharge spout by the action of the lower fan. All of the coal discharged from the mill is finished product and requires no subsequent screening.

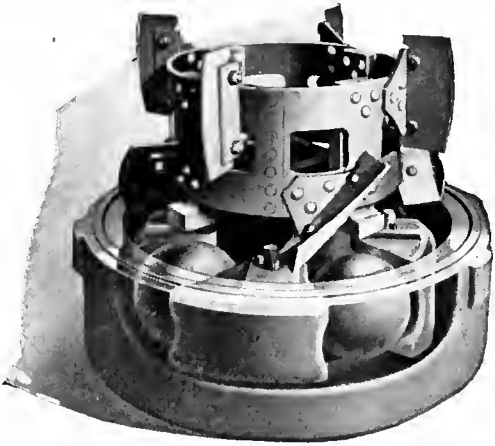

Fig. 6.—Fuller-Lehigh Grinding Ring.

The current of air induced by the action of the lower or discharge fan passes over the pulverizing zone, and out through the screen surrounding the separating chamber, thus insuring cool operation and maximum screening efficiency. This current of air keeps the screen perfectly clean and enables the mill to handle coal containing a considerable amount of moisture.

When the mill is in operation, it is handling only a limited amount of coal at any one time. As soon as the coal is reduced to the desired fineness, it is lifted out of the pulverizing zone and discharged. As the crushing force is applied to only a limited amount of coal, the power required to operate the machine is reduced to a minimum. Furthermore, this power is applied directly to the coal being pulverized.

In order to insure steady operation, every mill should be provided with a storage bin of capacity not less than four to six times the hourly capacity of the mill. Each bin should have a chute or feed pipe, 6 or 8 in. in diameter, to permit the coal to flow from the bin to the hopper of the mill feeder. This chute should be provided with a gate or cut-out slide placed close to the bin so that the flow of coal through the chute may be controlled.

A platform should be provided around the mill so that the operator may have easy access to the feeder. The floor of this platform should be about 3 in. below the top flange of the intermediate section. A small volume of air is discharged from the mill with the finely pulverized coal. An air chamber should therefore be provided in connection with the conveyor taking the coal away from the mill, to permit the free escape of the air. The size of the air chamber varies with the size and number of the mills discharging into the conveyer. The air chamber should be proportioned so that an area of cross-section of 1 sq.ft. is provided for a 33-in. mill and of 1½ sq.ft. for a 42-in. mill. A vent pipe about 10 in. in diameter should be placed on top of the air chamber. This vent pipe may be connected with a suitable collecting chamber to prevent loss of dust from this source.

In order to facilitate the erection of the mills and the renewal of worn parts, it is advisable that some form of hoist be placed above the mill. These hoists should have a capacity of three (3) tons for the 33-in. mill, and four (4) tons for the 42-in. mill. These mills are capable of grinding coal to a fineness such that at least 95 per cent will pass through a 100-mesh screen.

Raymond Bros.' Impact Pulverizer. The Raymond roller mill (Fig. 7) crushes and grinds coal by gravity and centrifugal force. At the top of the main shaft is a rigidly attached spider which rotates with the shaft. To the arms of this the rollers are pivotally suspended by trunnions carried in bearings in the roller housing. Both upper and lower bearings of the roller journals within the journal housings are provided with long removable phosphor-bronze bushings. The rollers are made of cast iron with chilled faces.

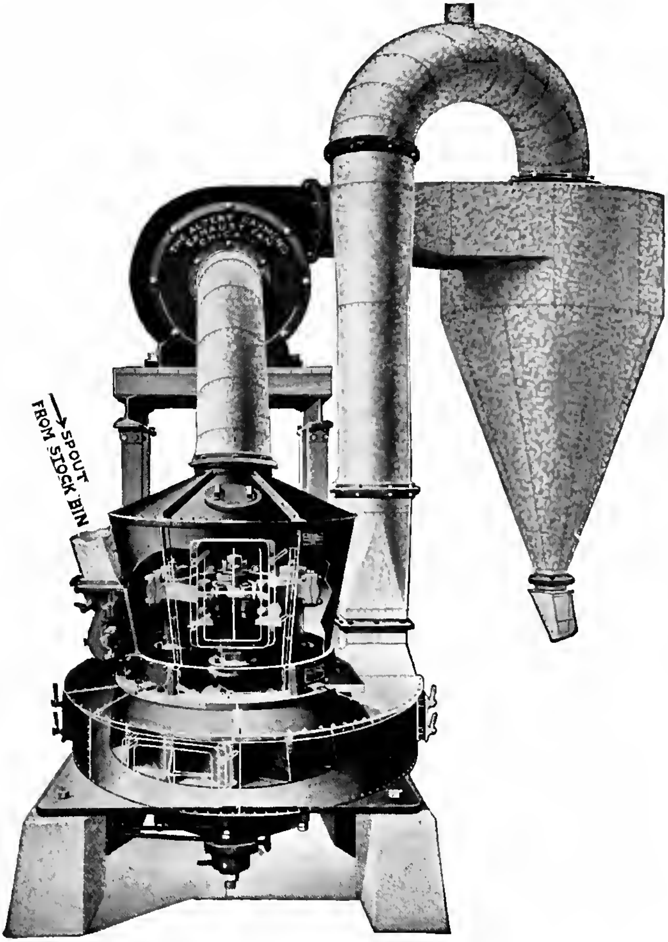

Fig. 7.—Raymond Roller Mill.

Centrifugal force throws the rollers outward against the steel ball ring. A plow is located ahead of each roller. This constantly throws a stream of coal between the face of the roller and the grinding ring.

In the mills with air separation, air enters the mill through a series of tangential openings around the pulverizing chamber directly under the grinding ring and rollers. That portion of the coal which is reduced to the required fineness by one passage of the roller is instantly carried up by the air current to the receiving receptacle. That which is not ground sufficiently fine by the first roller is carried between the succeeding roller and the grinding ring to receive a second treatment.

If the mill is kept properly filled with coal, each of the plows will throw a constant stream between the two grinding faces, preventing direct contact of the roller and the grinding ring.

In this mill the casting supporting the plows is attached to and rotates with the slow-speed upright shaft, and little power is required to raise the coal and throw it between the crushing surfaces of the roller and the grinding ring. The plows can be removed without taking the mill apart, by simply opening one of the doors. The construction is such that the faces of the rollers always remain parallel with the face of the grinding ring.

POINTS ON AIR SEPARATION

To obtain perfect separation and secure an impalpable powder, the air must be expanded and rarefied so that coarse particles will drop out of the current.

To obtain a large quantity of impalpable powder per hour by air separation, a large volume of air must be used in order to lift the material.

To use a large volume of air and yet obtain a current so light as to carry off only the impalpable powder, there must be ample room to expand and rarefy the air.

To secure perfect separation, the mechanism for expand-

VOLUMES AND WEIGHTS OF DRY AIR AT ATMOSPHERIC PRESSURE, 14.6963 POUNDS PER SQUARE INCH

$$\text{Weight in pounds per cubic foot} = \frac{.080728}{1+.0020358(T-32)} \qquad \text{Volume in cubic feet per pound} = \frac{1+.0020358(T-32)}{.080728}$$

Temp. Deg. F.	Volume as Compared with Volume at 32°.	Weight of 1 Cu.ft. of Air in Pounds.	Volume of 1 Lb. of Air in Cubic Feet.	Temp. Deg. F.	Volume as Compared with Volume at 32°.	Weight of 1 Cu.ft. of Air in Pounds.	Volume of 1 Lb. of Air in Cubic Feet.
0	.9349	.08635	11.581	700	2.3599	.03421	29.233
10	.9552	.08451	11.833	725	2.4108	.03348	29.863
20	.9756	.08275	12.085	750	2.4617	.03279	30.494
30	.9959	.08106	12.337	775	2.5126	.03213	31.124
32	1.0000	.08073	12.387	800	2.5635	.03149	31.755
40	1.0163	.07943	12.589	825	2.6144	.03088	32.385
50	1.0366	.07788	12.841	850	2.6653	.03029	33.016
60	1.0570	.07638	13.093	875	2.7162	.02972	33.646
70	1.0774	.07494	13.346	900	2.7671	.02917	34.277
80	1.0977	.07354	13.598	925	2.8180	.02864	34.907
90	1.1181	.07220	13.850	950	2.8689	.02814	35.538
100	1.1384	.07091	14.102	975	2.9198	.02765	36.168
110	1.1588	.06967	14.354	1000	2.9707	.02718	36.799
120	1.1791	.06847	14.606	1025	3.0216	.02672	37.429
130	1.1995	.06730	14.858	1050	2.0725	.02628	38.060
140	1.2199	.06618	15.111	1075	3.1234	.02585	38.690
150	1.2402	.06509	15.363	1100	3.1743	.02543	39.321
160	1.2606	.06404	15.615	1125	3.2252	.02503	39.952
170	1.2809	.06302	15.867	1150	3.2761	.02463	40.582
180	1.3013	.06204	16.119	1175	3.3270	.02426	41.212
190	1.3217	.06108	16.372	1200	3.3779	.02390	41.843
200	1.3420	.06015	16.624	1225	3.4288	.02354	42.473
210	1.3624	.05924	16.876	1250	3.4797	.02320	43.104
212	1.3664	.05908	16.926	1275	3.5306	.02286	43.734
220	1.3827	.05838	17.128	1300	3.5815	.02254	44.365
230	1.4031	.05754	17.381	1325	3.6323	.02222	44.994
240	1.4234	.05671	17.633	1350	3.6832	.02192	45.625
250	1.4438	.05591	17.885	1375	3.7341	.02162	46.255
260	1.4642	.05513	18.137	1400	3.7850	.02133	46.886
270	1.4845	.05438	18.389	1425	3.8359	.02104	47.517
280	1.5049	.05364	18.641	1450	3.8868	.02077	48.147
290	1.5252	.05293	18.893	1475	3.9377	.02051	48.777
300	1.5456	.05223	19.145	1500	3.9886	.02024	49.408
320	1.5863	.05089	19.649	1550	4.0904	.01974	50.669
340	1.6270	.04962	20.154	1600	4.1922	.01926	51.930
360	1.6677	.04841	20.659	1650	4.2940	.01880	53.191
380	1.7085	.04725	21.164	1700	4.3958	.01836	54.452
400	1.7492	.04615	21.668	1750	4.4976	.01795	55.713
420	1.7899	.04510	22.172	1800	4.5993	.01755	56.973
440	1.8306	.04410	22.676	1850	4.7011	.01717	58.234
460	1.8713	.04314	23.180	1900	4.8029	.01681	59.495
480	1.9120	.04222	23.685	2000	5.0065	.01612	62.017
600	1.9528	.04134	24.189	2100	5.2101	.01549	64.539
520	1.9935	.04050	21.694	2200	5.4137	.01491	67.061
540	2.0342	.03969	25.198	2300	5.6173	.01437	69.583
560	2.0749	.03891	25.702	2400	5.8208	.01387	72.104
580	2.1156	.03816	26.207	2500	6.0244	.01340	74.626
600	2.1563	.03744	26.711	2600	6.2280	.01296	77.148
620	2.1971	.03674	27.216	2700	6.4316	.01255	79.670
640	2.2378	.03607	27.720	2800	6.6352	.01217	82.192
660	2.2785	.03543	28 224	2900	6.8388	.01180	84.714
680	2.3192	.03481	28.729	3000	7.0424	.01146	87.236

ing and rarefying the air must be such that the coarse particles will drop out of the current and not carry the fine powder with them.

The apparatus must be so constructed that the coarse particles or tailings will drop by gravity into the contracted portion of the separator, where the blast is stronger, in order that they may pass out through the tailing spout or back into the pulverizer without carrying the fine material with them.

The nearer the condition within the air space of the apparatus can be made to approach a vacuum, the finer will be the separation.

COST OF LABOR AND MAINTENANCE FOR POWDERED COAL WITH RAYMOND PULVERIZERS

Total Cost per Ton, Cents.	Capacity in Tons per Hour.	Per Cent 100-mesh.	Per Cent 200-mesh.	Total Horse-power.	Horse-power per Ton.	LABOR		Maintenance Cost, per Ton, Cents.
						Men at $2 per Day.	Cost per Ton, Cents.	
11.0	2	95	82	45	22.5	1	10.0	1.0
11.8	2	.....	95	60	30.0	1	10.0	1.8
7.6	3	95	82	60	20.0	1	6.6	1.0
8.4	3	.....	95	85	28.3	1	6.6	1.8
6.0	4	95	82	75	18.8	1	5.0	1.0
6.8	4	.....	95	120	30.0	1	5.0	1.8
5.0	5	95	82	85	17.0	1	4.0	1.0
5.8	5	......	95	145	29.0	1	4.0	1.8
4.3	6	95	82	120	20.0	1	3.3	1.0
5.1	6	.....	95	170	28.2	1	3.3	1.8
3.0	10	95	82	170	17.0	1	2.0	1.0
5.8	10	.....	95	255	25.5	2	4.0	1.8
2.6	25	95	82	425	17.0	2	1.6	1.0
4.2	25	.....	95	680	27.2	3	2.4	1.8

The cost in the above table does not include that of power, as this is variable with local conditions. The cost of maintenance when grinding 95 per cent 100-mesh is much less than when grinding 95 per cent 200-mesh. As a general rule, doubling the fineness of the mesh doubles the maintenance cost.

The Jeffrey Swing Hammer Pulverizer. In the past few years, the swing hammer pulverizer has proved itself to be an efficient machine for the pulverizing of coal and other materials.

The machine shown in Fig. 8 pulverizes coal by striking it while in suspension, as opposed to the rubbing and abrasion mills which roll and mash the coal between hard surfaces. The material to be reduced is fed in near the top of the machine, and in falling comes in contact with rapidly revolving hammers, which drive the coal against the breaker plates, from which it rebounds again into the paths of the hammers.

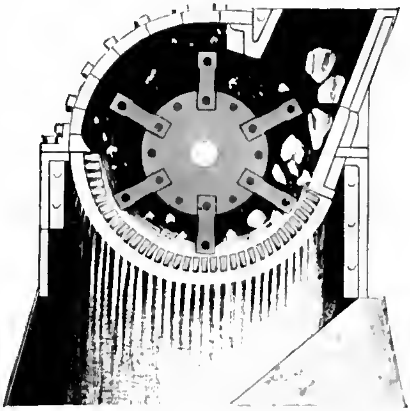

FIG. 8.—Jeffrey Swing-hammer Pulverizer.

Fineness is to a large extent determined by the intensity of the blow, and hence different degrees of reduction may be had by simply varying the speed of the machine. Different materials and different conditions of the same material as to temperature, moisture, etc., will result in corresponding differences in the degree of reduction, so that it is impossible to predict beforehand the results to be expected from any particular material until it is tried out.

The supply of coal may be fed by hand or discharged directly from a large bin, some sort of automatic feeding device being desirable. The coal falls down on a sloping breaker plate where it is engaged by the rapidly moving hammers. The partially reduced material immediately passes over the cage of screen bars. Here all that is sufficiently fine will pass through, while the residue is carried around the machine for a second operation. The top breaker plate materially assists in reducing oversize coal.

The Aero Pulverizer. The Aero pulverizer, Fig. 9, consists of three interiorly communicating chambers (type " E " has four) of successively increasing diameters, in which revolve paddles on arms of correspondingly increasing lengths. The separate chambers are in fact separate pulverizers on a single shaft, each succeeding pulverizer having greater speed at its periphery and therefore greater power for fine grinding. An additional chamber contains a fan, the function of which is to draw the more finely pulverized coal successively from one chamber to the next, and to deliver it through a pipe connection to the furnace under the impetus of a forced draft. The separate pulverizers and fan are enclosed in one steel cylinder. An adjustable feed mechanism controls and varies the quantity of coal admitted and delivered by the machine.

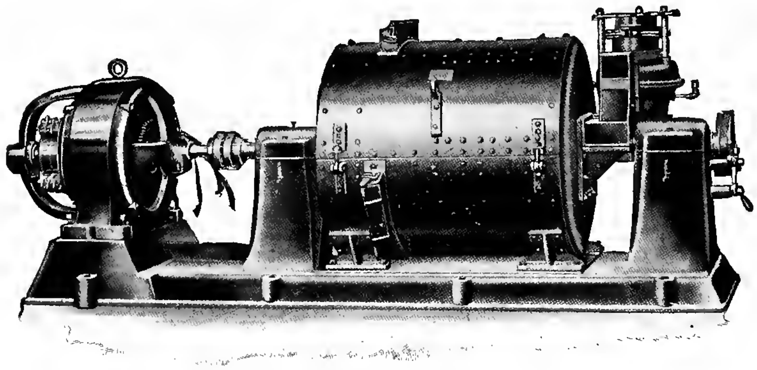

Fig. 9.—Aero Pulverizer.

The feed mechanism is exact and uniform in its operation and is easily adjusted to meet even minute variations in the fuel requirement. Two adjustable inlets in the feed mechanism admit the air required for fine grinding. An auxiliary inlet between the last grinding chamber and the fan, controlled by a damper, admits such additional air as is required for combustion. The air dampers, with the feed control, give regulation of the flame within a wide range.

The discharge may be either right or left-hand as desired. The pulverizer is dust-proof, and is arranged for easy repair to the parts susceptible to water. The cost of such repair is small. The pulverizer may be located either in front of the furnace or at either side, or above, or below.

The connection between the pulverizer and the furnace is usually a galvanized iron pipe. No additional feeding or mixing apparatus is necessary, as the powdered coal and air are intimately mixed in the pulverizer. The furnace end of the discharge pipe is made of such size and shape as the furnace construction may require.

STANDARD SIZES OF AERO PULVERIZERS

Size.	Weight, Pounds.	Height, Inches.	Floor Space, Inches.	Normal Output Soft Coal, Pounds per Hour.	R.p.m.	Normal Horse-power Consumption.	Horse-power of Motor Recommended.
A	2250	28¾	61¾ × 27¾	600	2050	10	15
B	4000	45	77½ × 29	1000	1750	14	25
C	4500	46¾	78⅛ × 29	1800	1550	25	35
D	5900	50	89 × 33	3000	1450	40	50

Bonnot Pulverizer. The Bonnot pulverizer, Fig. 10, consists of a heavy one-piece main frame, which contains the grinding parts, consisting of grinding rolls and roll head or driver. The main frame is bored and lined with a removable steel bushing forming a seat for the grinding ring.

The grinding ring stands vertically and is held in place by two large clamp bolts extending through to the rear of the base. The rolls revolve around the inner side of the ring and are held in place and driven by the head or driver. The driver is recessed to receive the rolls and is so shaped as to converge the coal on the track in front of the rolls. It is a high-carbon steel casting with hard-wearing surfaces.

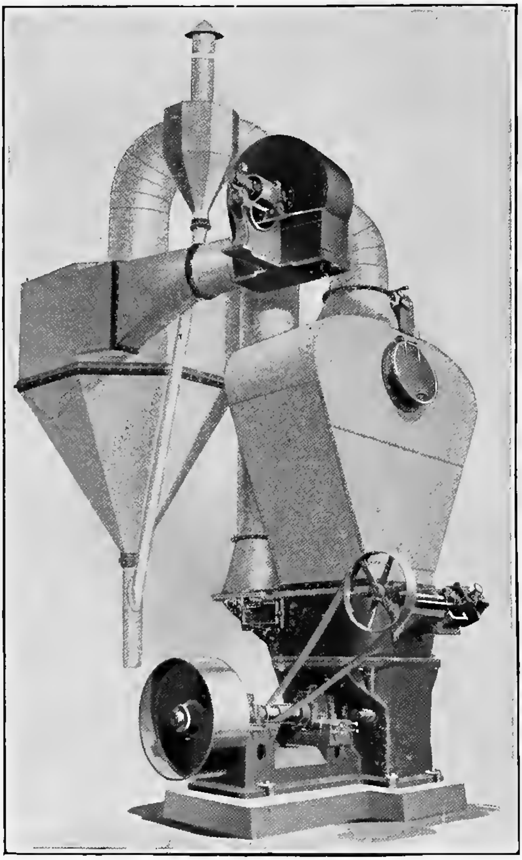

Fig. 10.—Bonnot Pulverizer.

There is a large cover plate on the side of the main frame, through which the driver, rolls and grinding ring may be removed without disturbing other parts.

This pulverizer is particularly adapted to use with a separator, owing to the fact that the grinding parts revolve in a vertical plane, and throw a constant stream of ground coal upward against the separator.

The base of the separator is attached to the top of the grinding chamber, and is made with the sides flaring or diverging so as to form a large air chamber into which the coal is thrown in a constant stream by the grinding parts. The air current entering at the bottom of the separator passes upward and carries away the fine material. Because of the increased area toward the top of the separator, the velocity of the air current is there reduced. This allows the coarser material to fall back into the grinding chamber, while the fine material is carried upward.

A feature of this separator is an interior flue on each side, by means of which a considerable range of fineness may be secured. These flues are hinged at the bottom and adjusted by a lever on the outside of the separator. To obtain a fine product, the flues are inclined outward to a position parallel with the walls of the separator; while for obtaining a coarse product, they are set in a vertical position. It is possible, without changing the speed of the fan, to obtain a range of fineness, from 98 per cent through a 200-mesh and practically all through 100-mesh, to a product of which 50 per cent will pass 100-mesh, and the balance range in size to 16-mesh or even coarser. The velocity of the air current and the position of the flues will determine the degree of fineness.

The air current carrying the impalpable material passes from the separator through a pipe to the collector, entering the latter on the side, in a horizontal direction.

Since the collector is polygonal in shape, the various sides or faces break up and change the direction of the air current, meanwhile reducing the velocity. This allows the material in suspension to drop to the discharge pipe at the bottom of the collector. At the top of the collector, a connection leads to a small auxiliary collector of similar shape, which is designed to remove any moderately fine material still remaining in suspension.

The Tube Mill. The Bonnot tube mill consists of a cylinder of steel plate, usually made from 4 to 5 ft. in diameter and in any length from 15 to 25 ft. The heads of the mill are lined with hard iron plates and the cylinder with either silex stone or hard iron as may be desired. The cylinder is supported at each end on large gudgeons, which are cast solid with the circular steel heads forming the ends of the cylinder. These heads are bolted to heavy cast rings running on large bearings. The mill is driven by means of a countershaft having a pinion engaging with a large spur gear attached to the cylinder.

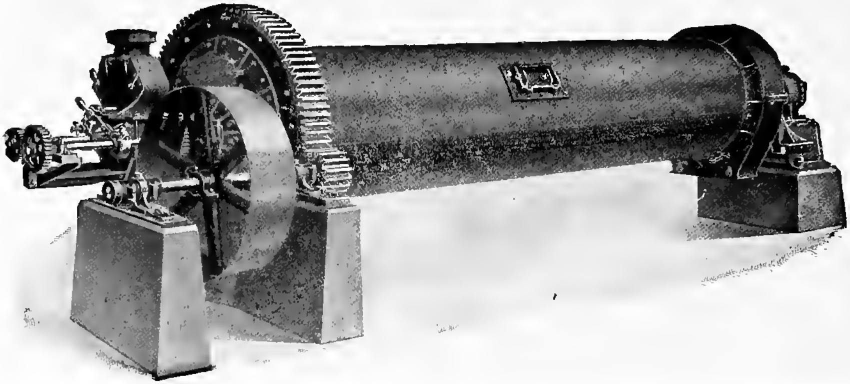

Fig. 11.—Bonnot Tube Mill.

The material is fed into the cylinder by means of a worm in the hollow gudgeon at one end of the mill. The feeder is an automatic regulating device and can be adjusted instantly to give any desired capacity up to 50 per cent above the normal capacity of the mill. It is supported by a heavy bracket bolted to the main bearing. It is driven direct, by means of gearing from the end of the gudgeon.

The material is discharged from the mill either through the hollow gudgeon at the discharge end, or through the end of the cylinder by means of slotted holes through the liners and discharge head. When the latter arrangement is used, a close-fitting cast-iron dust housing is provided, which is supported by brackets resting on the main bearing. The fineness of the product obtained is regulated by the amount of material fed into the mill.

This tube or pebble mill is economical with regard to wear owing to the fact that it is a slow-running machine and grinding is done by the rolling or impact of flint pebbles, with which the cylinder is filled about one-half full. Such materials as cement clinker and similarly hard, gritty substances are handled advantageously by the tube mill. The efficiency of the mill is not reduced by wear on the pebbles and lining, provided the normal charge of pebbles is maintained. Some tube mills use lengths of pipe or tubing, or steel-plate punchings, instead of loose pebbles. All grind very fine; so fine, in fact, as to be frequently expensive in power.

CAPACITIES OF TUBE MILLS

A 5 by 22 ft. mill with Silex lining, containing 6 tons of pebbles, fed with coal not exceeding ¼ in. size, ground 1½ to 2 tons per hour, 94 per cent to 100-mesh.

The same mill, with pebbles and 4-ft. tubes, ground 2¼ tons per hour, 95 per cent to 100-mesh.

A No. 18 Kominuter mill grinding 10 to 12 tons per hour sent all tailings which would pass over a ½ by $\frac{1}{16}$-in. screen to a Bonnot tube mill loaded with punchings. Two such mills, 5 by 9 ft., ground 4½ tons of the tailings per hour, 96 per cent to 100 mesh.

A 5 by 22 ft. Silex-lined mill loaded with 11 tons of slugs ground 3½ to 4 tons per hour, 96 per cent to 100 mesh. A precisely similar mill on a succeeding day produced this same fineness on 4½ to 5½ tons per hour.

CHAPTER IV

FEEDING AND BURNING POWDERED COAL

In a paper before the American Institute of Mining Engineers, 1913, Mr. H. R. Barnhurst lays down certain principles of which the following is an abstract: When coal is shoveled or fed in bulk, a certain degree of comminution or pulverization takes place in the fire as an incident of combustion. Coal does not burn in lumps, but its ash comes away pulverized. This gradual pulverization occurs in the fire at the expense of some of the heat units in the fuel. As this pulverization is accomplished slowly, it is necessary to supply a large grate area so that the collective surface exposed for disengagement of heat shall be sufficient for the purpose for which the fire is used.

To be classed as a fuel a material must be able to give out more heat than it receives. No fuel will burn until its particles are brought to this self-supporting condition by the heat absorbed from particles previously burned. Not only this, but the oxygen of the air must be heated likewise to a combining temperature. This involves heating the accompanying nitrogen. This heat must be passed from substance to substance in increments small in themselves but collectively as large as the occasion demands.

In the use of powdered coal the fuel is already prepared for the absorption and evolution of heat. In addition, it is aimed to prepare the air, by a practically similar subdivision, for joining in the process. The delivery of coal and air to the furnace must be controlled so that the proper amount of each will be secured.

The sequence of events in combustion is as follows: the volatile elements of the fuel are first disengaged. These highly combustible hydrocarbons combine with the oxygen of the air, burning to CO_2 and H_2O, and disengaging heat enough to bring up to an ignition temperature the fixed carbon components.

It is evident that comparatively large masses of fuel supplied with large volumes of air will, for reasons simply mechanical, fail in efficiency. This is more particularly the case when large contents of volatile matter are suddenly set free by contact with another mass of incandescent fuel and with heated surroundings. Under such conditions it is impossible to get the best results from any fuel. The sweeping-off of volumes of volatile gases by large volumes of insufficiently heated air produces smoke. This smoke represents but a small weight of carbon unburned, but may indicate a condition under which a large quantity of gases passes off uncombined. A heavy draft pressure accentuates this condition, and records are plentiful of the passage through fires of large excesses of oxygen which has failed of its duty from lack of heat preparatory to combination.

A pulverized fuel, the particles of which are each sursounded by a minute envelope of air, sufficient thoroughly to burn them, is an ideal fuel under ideal conditions. In projecting a cloud of such fuel into a highly heated chamber, each particle because of its opacity becomes an absorbent of heat, radiating not only from the chamber walls, but from each neighboring particle as it inflames. This inflammation progresses with rapidity almost inconceivable. Pulverized fuel injected with its air supply at a speed of several thousand feet per minute inflames right up against the delivery nozzle, the flame playing about its mouth. This is best accomplished by avoiding high pressure in projecting the fuel. The final combination of air and fuel occurs at the instant of projection into the furnace. The air carrying the fuel expands as soon as it is heated. This expansion is of course due to the increase in temperature, and explains the large volume assumed by the flame on leaving the point of entrance.

The powdered coal problem is one of combustion under peculiar conditions. The burning of powdered coal differs from the burning of solid fuel in one essential particular. In the combustion of coal in commercial sizes lying on the grate, the air for combustion passes between the pieces of coal and the products of combustion pass off in the flue. Powdered coal does not burn under such conditions, as the particles are so fine that sufficient air for combustion could not reach the coal through crevices between the particles lying in a solid bed. To burn powdered coal successfully, it must be burned while in suspension in the air. In such a position each particle is surrounded by air which supports the combustion. The form of furnace used in making Portland cement is favorable for combustion in suspension, since it is very long and affords plenty of room.

Contact of the particles of coal dust with other bodies results in the lowering of temperature to such an extent as to make combustion impossible. There is a more or less complete loss of any fuel which falls down to the grate. The time for combustion is evidently increased as the size of the dust particle is increased; from which it follows that the finer the grinding, other things being equal, the quicker and more perfect will be the combustion.

In the early days of development of the process of powdered coal burning, ignorance of the necessity of fine grinding was the cause of many failures in burning the fuel. In the cement industry, special devices for regulating the supply of air for injecting the fuel are supplied, but no special controlling apparatus is supplied for the air which enters the kiln through the various openings around the hood. It would be difficult to control the admission of such air: but by increasing the fuel charge, it is possible to bring the air supply down to any relative proportion desired.

Patents taken out many years ago for the burning of powdered coal under boilers and in various arts show variations in the kinds of pulverizers and feeding devices, and also foreshadow the idea of delivering the powdered coal into the furnace by a jet of air or steam.

The perfect combustion of 1 lb. of carbon demands $2\frac{2}{3}$ lb. of oxygen. This is contained in 11.6 lb. of air, or about 154 cu.ft.; should less than this quantity of air be supplied, a proportionate amount of fuel will be burned to CO, with a loss of two-thirds of its potential efficiency. A part of this loss may be regained by contact with heated oxygen; or the CO may pass on and burn in the chimney, doing no good. Carbon monoxide is necessarily formed in an atmosphere of gases deficient in oxygen, and its formation renders still more difficult the further establishment of active combustion.

The temperatures attainable with powdered coal are very high, so high that excess air is commonly admitted in proportions ranging between 50 and 100 per cent. This excess air dilutes the gases resulting from combustion and lowers the temperature.

The following table shows the temperatures attained in the perfect combustion of pure carbon with varying amounts of air:

	Deg. F.
1 lb. carbon with 11.6 lb. air (normal)	3990
1 lb. carbon with 12.76 lb. air (10% excess)	3747
1 lb. carbon with 13.92 lb. air (20% excess)	3526
1 lb. carbon with 15.08 lb. air (30% excess)	3333
1 lb. carbon with 16.24 lb. air (40% excess)	3153
1 lb. carbon with 17.40 lb. air (50% excess)	3002
1 lb. carbon with 18.56 lb. air (60% excess)	2849
1 lb. carbon with 19.72 lb. air (70% excess)	2725
1 lb. carbon with 20.88 lb. air (80% excess)	2509
1 lb. carbon with 22.04 lb. air (90% excess)	2847
1 lb. carbon with 23.20 lb. air (100% excess)	2345

In practice, the furnace tender soon becomes educated to the point of judging whether a fire is hot enough by its color and by the length of the flame. The more perfect the conditions the shorter and whiter the flame.

Some fuels can be burned almost without care on the part of the operator; gas is one and oil another. There is no economy in such ways of operating, but the furnace is undeniably hot. Mr. A. S. Mann, of the General Electric Company, remarked: " I recall an instance where an oil man wanted a really good fire and had no oil to waste. He watched the fire all the time and kept it right; if he eased off his oil a trifle he cut down his air too and did not forget to look at the chimney, top and bottom. Such work always pays, whatever the fuel may be.

" Powdered coal is not a fuel that can be left for half a day to itself while the fireman goes to grind his knife and pare an apple." Fires may run all day with no change in adjustment whatever, but somebody should always know that they are right; and the fire should be looked after every half hour or so. There is always slag and some fine ash forming; it is well to know where these are going. On the other hand a wrong adjustment of either coal or air soon makes itself apparent. Powdered coal burns best with a supply of 200 cu.ft. of air for each pound. It can burn, and burn clearly, with 160 ft. and even less, but the excess pays. When the supply exceeds 200 ft. efficiency begins to fall. There is a noticeable loss even at 208 ft. The eye cannot discriminate between a 200-ft. and a 208-ft. fire, but it can recognize a 250-ft. or even a 220-ft. blaze. There is a marked change in the appearance; and unless a " cutting " fire is really wanted, there is no excuse for such bad mixtures.

" This is not true of other fuels. Solid coal on a grate is not doing its best at 200 ft., and it takes a remarkably close observer to note the difference with a 240-ft. fire. With oil this is even more pronounced. It is the usual thing to find an oil fire with air greatly in excess, and the fact not known. The average operator will not even try to find out whether he is wrong, for in order to do so he must reduce his air little by little until things go wrong, and that takes time. Firemen are ' not paid to save fuel.' The powdered coal fire begins to spark and wheeze when it has too much air. ' In a typical powdered-coal feeding and burning installation, the coal is received in a bin over the feeders,

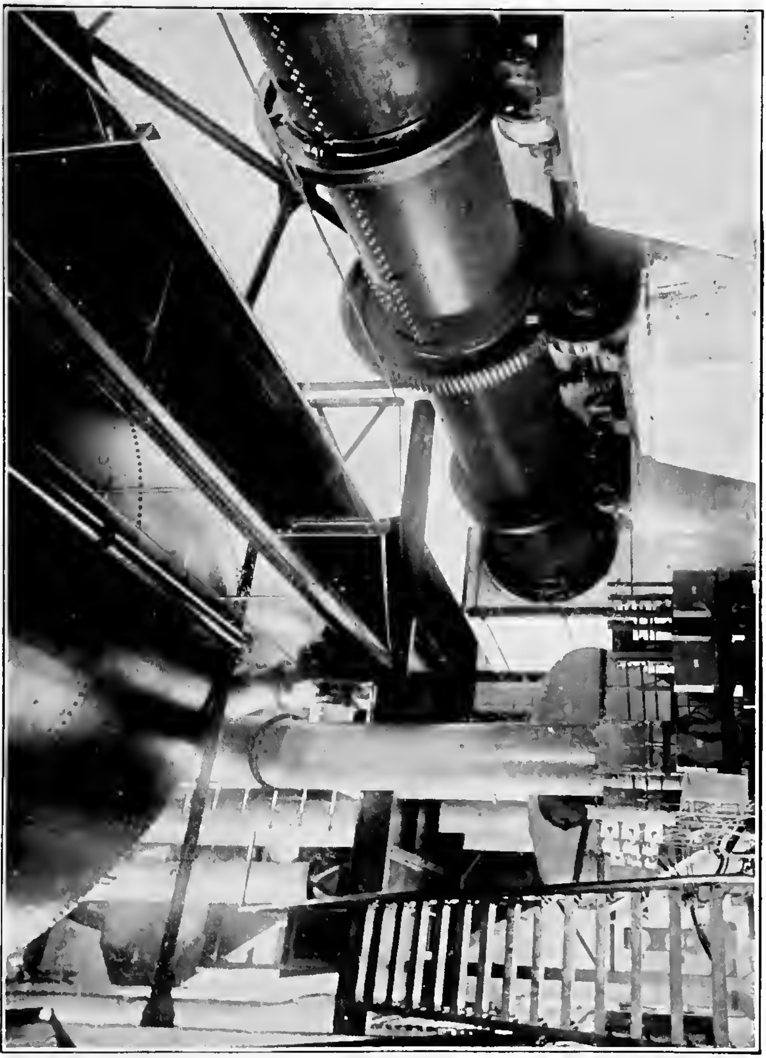

Pulverized Coal Plant.

where its weight is about 38 lb. per cubic foot when it is loose in the bin. Settling brings the weight down to about 45 lb. per cubic foot. Across the bottom of this bin, and within a pipe extending horizontally from it, is a double-flight worm or feed-screw. This double-flight screw resists the tendency of the light coal to flow of itself along the feed-screw. The screw extends over a flanged pipe-cross into which the fuel is delivered. The rear end of the screw is supported by a bearing in a flange on the side of the bin, the shaft projecting to receive a driving pulley or chain sprocket. The delivery end of the screw shaft is supported by a bearing in the cover of the horizontal opening of the flanged pipe-cross. The top opening of the cross is uncovered to permit air to draw down with the falling fuel. This fuel descends a vertical pipe attached to the lower opening of the cross, the pipe being long enough to be within the funnel or injection pipe. At the bottom of the funnel is a diagonal plate upon which the fuel falls. The plate is tight against the air pipe on the up-stream end, and is flared open, on the side towards the furnace (down the current). It covers about one-fourth the diameter of the pipe, thus forming at this point a ' vena contracta,' and producing a suction in the funnel. Consequently, supplementary air is drawn through with the fuel. The fuel spraying upon this plate mixes very thoroughly with the air from the fan, the eddy currents assisting materially in dispersal of the fuel through the main column of air.

" The admission funnel should be far enough from the furnace to permit this mixture to be thorough. Pressures carried abnormally high may defeat this, and they also tend to project the fuel too far into the furnace before flushing. As soon as the fuel cloud begins to absorb the heat of the chamber into which it passes, a rapid expansion of the air takes place, separating the particles of fuel in suspension. The amount of expansion is determined by the ratio of the absolute temperatures, in the furnace and of the initial air. It is a matter of discussion whether the best results are obtained by a delivery of all the air found necessary for combustion through the feed pipe, or to use a smaller quantity of air in the feed pipe and provide a further supply from other openings. Good practice would seem to point to absolute control of the air by the fan, and control of the fuel by a varied speed of the feed-screw. The furnace should have a good natural draft to a chimney, controlled by a damper."

FURNACES

The designing and building of furnaces is an undertaking that calls for engineering skill. Speeds, volumes and currents must all be considered; sizes and areas influence heat generation and distribution; the position of the egress ports, if their number or size is great, may defeat the purpose of the furnace. It will not do to build a furnace in a haphazard way, apply a burner somewhere and, if it does not work, feed in enough fuel to make it work. Perhaps there is no fuel so sensitive to correct use as powdered coal.

While coal ignites freely, in a hot chamber, this ignition necessitates the absorption of heat from some source, and if coal rapidly projected by air does not develop its heat near the point of ignition, other means must be devised to maintain the heat necessary for ignition where ignition is needed, i.e., at the first entrance of the coal into the furnace. Giving the fuel too great velocity upon entrance is not good practice.

Some singular errors and misconceptions have attended the practice of many users of powdered coal. More particularly is reference intended to the use of large fans to supply the air necessary for the projection of the fuel, where the air nozzle is reduced from 16 or 18 in. in diameter to 4 or 5 in. at the jet with the expectation that all of the air in the 16 or 18-in. pipe will be hurried through the 4 or 5-in. nozzle.

The first essential of a powdered coal furnace is a large combustion chamber where the flame can occupy about four times the volume of the flame produced by an ordinary grate fire. This entire combustion space must be free from any metallic cooling surfaces. There is little possibility of such a cooling surface in most metallurgical furnaces, but this is the probable reason why powdered coal has had thus far only limited application under steam boilers. Contact with a cooling surface stifles the flame and stops combustion. The reverberatory type of furnace is well suited to the use of powdered coal. It has a large combustion space, which in the case of powdered coal extends out over the hearth. In all cases, the fuel must be projected into a chamber sufficiently hot to cause instant deflagration. The furnace must be properly proportioned, properly equipped and in good condition.

BURNERS

There have been filed in the United States Patent Office almost as many patents on powdered fuel burners as on non-refillable bottles. Almost any engineer can design a successful burner after knowing the requirements. "Any mechanism which will give a uniform mixture of coal and air with both under control can be used as a burner for powdered coal."

Burners are usually made up of a screw conveyer of variable speed which drops the coal into a blast of air. One thing to be guarded against is the possibility of flushing. Powdered coal seeks its own level like water. It will sometimes run along a screw conveyer so as to get ahead of the screw. For this reason the screw is usually made very long, so as to introduce enough friction to keep back the flush of coal.

There is one very successful burner in which no mechanism whatever is used, everything depending upon the blowing of air through a pocket of powdered coal. The air picks up enough of the powder in its passage through to provide for combustion. Possibly this apparatus would have a closely limited capacity.

Some of the failures that have been experienced in burning powdered coal have been due to an incorrect method of introduction of air into the furnace, either by induced draft or by a blast separate from that which supplies the coal. Air and fuel must be mixed thoroughly before entering. It is possible to add a little more air after a mixture has been made, but good combustion should be first insured by a good mixture of fuel and air at entrance.

The burner must be designed so as to be free from pockets or storage spaces, and must be out of the influence of the heat of the furnace. Heat will cause coke to form and interrupt the operation.

One of the first patents granted in connection with powdered coal was that to Messrs. Whelpley and Storer in 1866. It covered the simple operation of feeding powdered coal so as to cause it to come into contact with the supply of combustion air. The pulverized coal was to be employed merely in order to assist solid coal fires already burning in the furnace. The idea was that the fuel entering with the column of air would meet, near the point of entrance, the flames of the furnace fires. Thus as the powdered coal entered the working chamber, it was instantly and thoroughly consumed. It was not intended to dispense with the usual fires maintained in the fire box of the furnace, but merely to augment them and to economize in fuel.

In 1870, the same inventors were granted a patent covering a device for introducing and regulating the supply of powdered coal and air into furnaces and fire boxes, through a large number of openings (Figs. 12 to 13).

In 1871, Mr. T. R. Crampton was granted a patent for an improvement in apparatus for feeding powdered coal to furnaces, which consisted of six, eight or more or less burners according to the size of the furnace. Streams of air mixed with powdered coal were injected into the back of the combustion chamber (which had a plain solid bottom without fire bars or divisions of any kind) through openings near each other and on the same plane, so that the streams commingled as they expanded on leaving their respective pipes or openings. This assured uniformity of combustion superior to that effected with either a single pipe or with branches from a single pipe opening into the combustion chamber at places too remote from each other to permit sufficient commingling of the fuel and air.

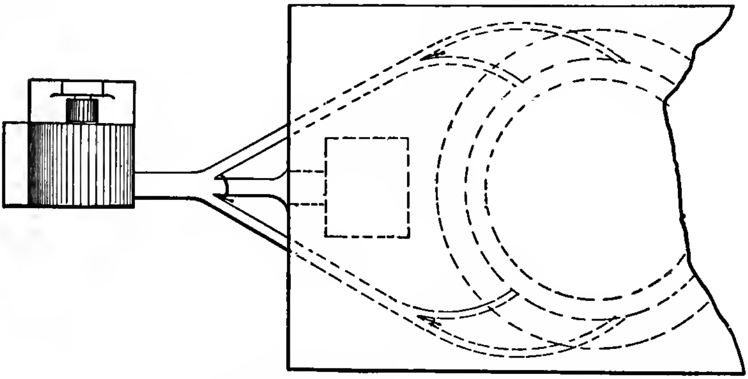

Fig. 12.—Whelpley & Storer Apparatus.

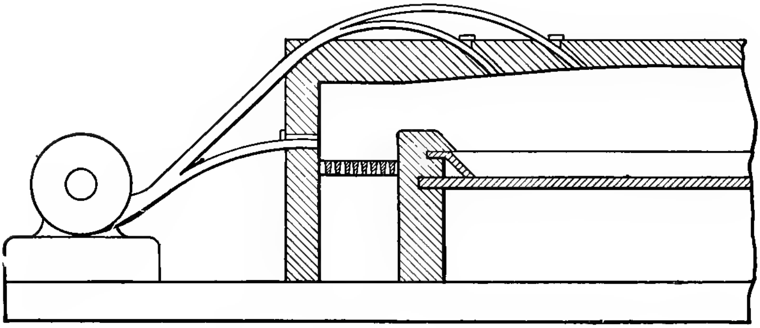

Fig. 13.—Whelpley & Storer Apparatus.

In order still further to promote combustion, the bridge wall was constructed with a suitable slope towards the openings, so that the commingled streams impinging on it at an angle spread in all directions. This led to a further commingling; and a combination of air and fuel homogeneous in its character was deflected over the bridge wall ready to do its work in the furnace.

Instead of relying upon the combination of air and fuel escaping from a single pipe as sufficiently perfect to secure continuous and uniform combustion, the fuel and air were thus subjected to, first, the action of similar streams from adjacent pipes; and, second, impingement upon the bridge wall, or even upon the bottom of the combustion chamber. The powdered coal, ground to the required fineness, was placed in rectangular reservoir, located above the plane of the pipes. In this reservoir there were rotating stirrers which urged the fuel through a gate at one end of the reservoir, and upon a roller, a part of whose periphery formed the bottom of a box attached to the reservoir which supported the fuel issuing from the gate.

Above the roller, just described, was another and smaller one, a part of whose periphery was within the box; the two rollers by proper gearing being made to move at about the same surface speed.

The rollers were adjustable as to speed, and received between their faces the powdered coal passing through the gate of the reservoir. They delivered it in a thin sheet of grains of uniform size into a trough, from which descended as many receiving tubes as there were conducting tubes leading to the furnace.

The upper openings of the receiving tubes in the trough were rectangular, and so arranged side by side as to divide equally the sheet of grains falling into them into as many portions as there were conducting tubes.

The bottoms of the receiving tubes were circular, and they were united each to its separate conducting tube, slightly on the furnace side of the open end of the latter.

Having thus secured to each conducting tube an equal supply of fuel, the next thing to be done was to combine or mix this fuel with air, and to force the combination, then called "carbonized air," into the combustion chamber. This was effected by a fan or similar contrivance. The blast of air was forced into a cylinder in the same plane with the conducting tubes, opposite to the open ends of which were an equal number of air nozzles.

These nozzles were smaller in diameter than the open ends of their respective tubes, and at a short distance therefrom, so that there was space into which the external air might enter into the conducting tubes along with that which was forced into them from the air nozzles (Figs. 14 and 15).

In 1871 a patent was granted to Mr. J. Y. Smith of Pittsburgh, Pa., on a device shown in Figs. 16 to 18, which the inventor describes as follows:

"An apparatus for feeding powdered coal into a furnace, combining in its construction the following elements, viz., an induction and an exhaust pipe, an intermediate wheel arranged to be revolved by the action of a current of steam, air or gas passing through said pipe, and a shoe or other feeding mechanism regulating the discharge of the powdered coal connected with said wheel."

In combination with a pipe or series of pipes for passing a current of steam or gas into the furnace or combustion chamber, there is employed a hopper or pipe for delivering into such current, the powdered coal; and an opening or series of openings for introducing air mingled with the steam or gas and powdered coal into the furnace or combustion chamber.

In 1876 Mr. Wm. West of Golden City, Col., was granted a patent for a powdered coal burner which consisted of a small screw conveyer for feeding the coal dust from a bin to one or more tubes; from which it dropped through a funnel-shaped pipe into a blast pipe. From this, the air picked it up and carried it into the furnace. The screw had a cone pulley or other means for regulating the speed of the conveyer (Fig. 19 to 20).

In 1880 Mr. West together with Mr. John G. McAuley improved the design of this powdered coal feeder and were granted a patent on their improvement. It consisted of constructing the feeder with a vertical conduit, through

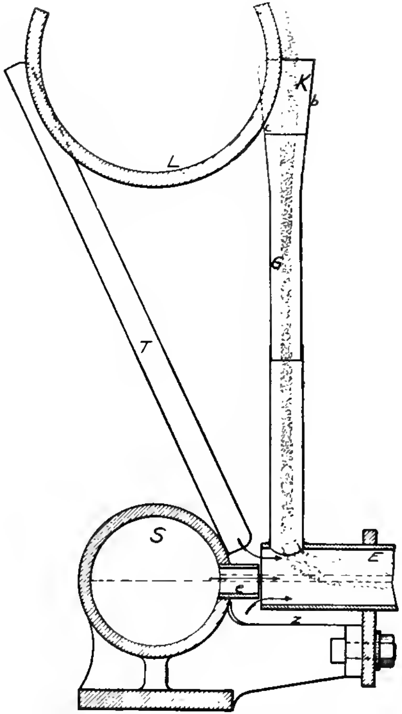

Fig. 14.—Crampton Aparatus.

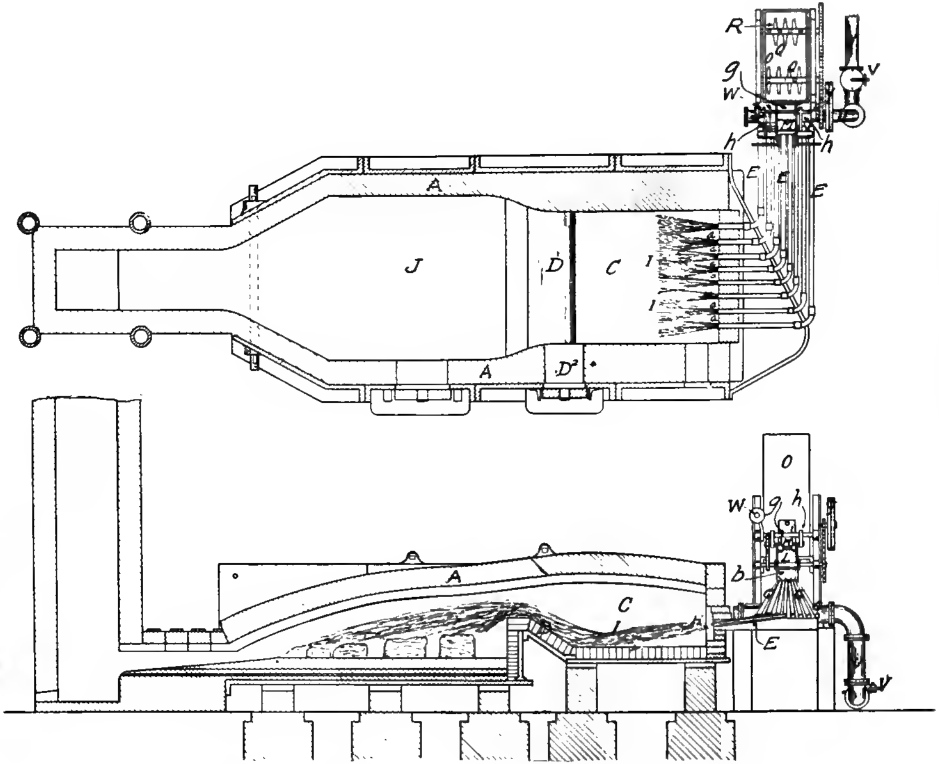

Fig. 15.—Crampton Apparatus.

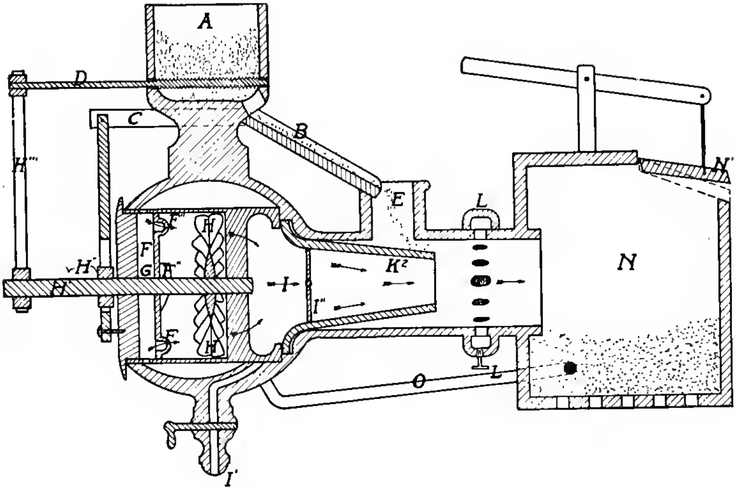

Fig. 16.—Smith Burner and Feeder.

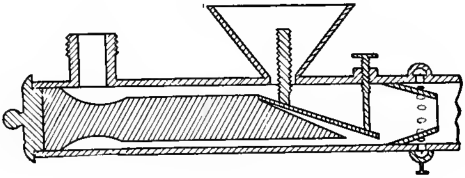

Fig. 17.—Smith Burner and Feeder.

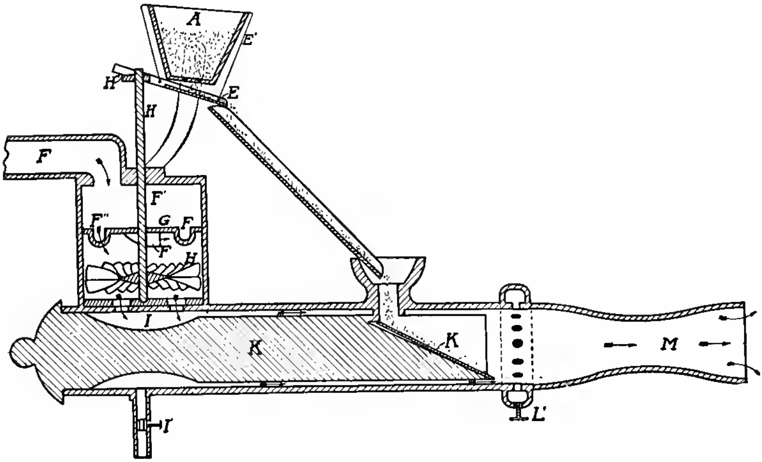

Fig. 18.—Smith Burner and Feeder.

which the powdered coal dropped, communicating with a horizontal pipe which was made of greater inside diameter

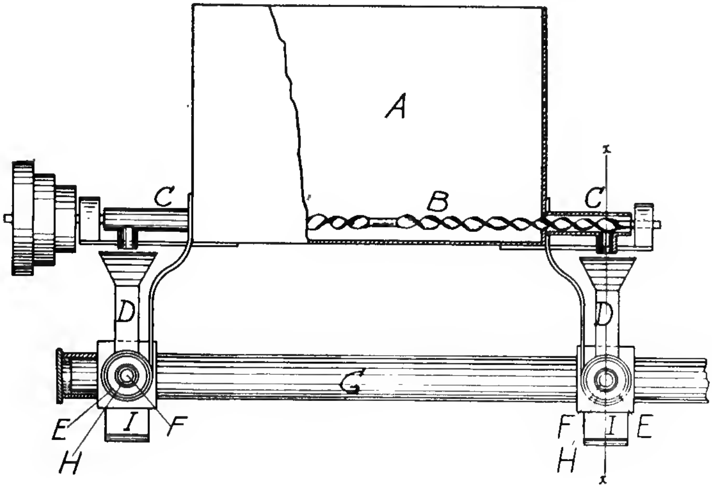

FIG. 19.—West Feeder.

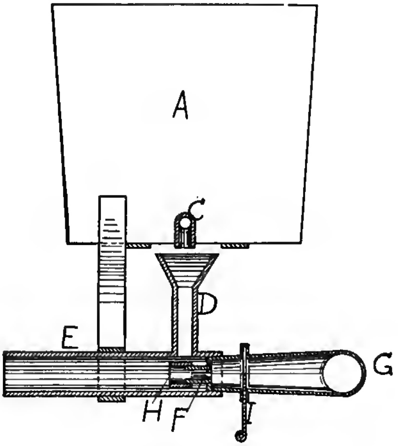

FIG. 20.—West Feeder.

just back of the point of entrance of the coal than it was farther back. An inclined shelf, at the bottom of the vertical fuel conduit, prevented the blast of air from striking upward and made for a better mixing of the particles of coal dust and air.

The Edison patents on feeding and burning equipment are described in Chapter V. Other apparatus of this sort will be found discussed in Chapters VIII and IX.

Pneumatic Feeding System. In most plants using powdered coal the above-described screw conveyer system is employed. About a year ago the author visited a number of works using powdered coal. Among them were several that are using the *air distributing* (Holbeck) system; and the contrast between the two systems was most marked.

The air distributing system is briefly described as follows: Air is the agent used for conveying the coal dust to the furnaces. The coal is first pulverized in the usual manner and delivered to a storage bin located in the coal building. This bin is the only one used for storing powdered coal in the entire plant. It is made of sufficient capacity to serve the furnaces for ten hours.

The powdered coal is taken from this bin by a standard double-flight screw conveyer, driven by a variable speed motor: and is then fed into the suction side of a high-pressure blower. From this it is blown into the distributing main and carried to the furnaces through branch pipes. The coal which is not used at the furnaces is returned through a return line to a collector located on top of the powdered coal bin, where it is extracted from the air and falls into the storage bin to be fed over again. The air from the return line, after the coal is extracted, is returned to the suction side of the distributing blower.

Interposed in the distributing main is a special flow indicator and controller; intended, first, to indicate the rate of flow of air through the system and second, to control the feed of powdered coal into the system so as to have a uniform mixture of coal dust and air to the burners, regardless of the number of furnaces in operation.

The return line permits a velocity of air in the distributing main sufficiently high to keep the powdered coal in suspension of the air and in circulation in the system, even with no furnaces in operation.

When the valves in the branches at the furnaces are opened so as to permit a flow of coal dust to the burners, there is an increase in the flow of air through the flow indicator. This increased flow is instantly indicated on the indicator dial as shown in Fig. 21. At the same time a small pilot motor is started, and by means of proper gearing the arm of a special field rheostat is moved in proportion to the increase in the flow of air through the distributing mains. This rheostat controls the variable speed motor that drives the feed screw, thus speeding up this motor and feeding more coal dust to meet the demand. In case a valve of the furnace should be partly closed, thus causing a decrease in the flow of air through the system, the pilot motor is automatically reversed, the rheostat arm is moved in the opposite direction, and the motor driving the feed-screw is slowed down so that the mixture of coal dust and air is automatically kept uniform.

With this system, the powdered coal can be conveyed to any reasonable distance. The author has seen a plant where the first furnace was 400 ft. from the pulverizing plant, and another where the last furnace on the line was 1500 ft. from the milling plant. If the velocity of flow is reduced, due to friction in the main, a second or even a third and fourth distributing blower or booster can be placed in the line and thus the circulation can be kept up for an indefinite distance.

The advantage of handling the coal dust in this way over the old system of using screw conveyors, are:

1. When it is taken into consideration that the air used for conveying the coal dust is also used to take the place of the secondary air for combustion, that would have to be furnished by some other means, the actual consumption of power for furnishing coal dust to the furnaces is very low.

2. The wear and high cost of repairs incidental to the old method of using screw conveyers is eliminated. It is esti-

mated that a 9-in. screw conveyer costs about $4.50 per lineal foot and the power cost to turn it will average at least $1.00 per day for every run of 250 ft. Screw conveyers are apt to clog up and stop feeding, necessitating work to locate the stoppage and then to make repairs.

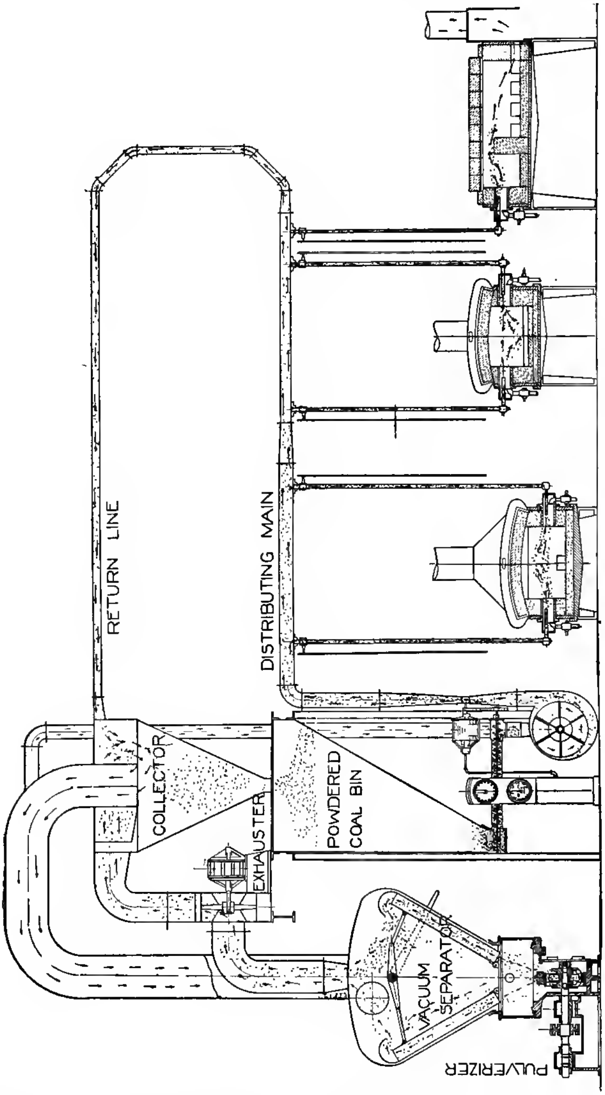

FIG. 21.—Holbeck System, Showing Indicator Dials.

3. Air distribution entirely eliminates the storage bin **at each** individual furnace, which takes up a great deal of space that can be used for other purposes. It also eliminates the " hanging-up " of coal dust at the furnaces, which may cause avalanching and flushing past the controllers, leading the furnaces to puff or smothering the fire. This difficulty from powdered coal (caking at the bins) seems to be quite general. The writer has seen the coal dust bins suspended by springs in shops where it was endeavored to stop the caking of the coal resulting from the jarring of forge hammers.

4. Within a few minutes after the furnaces are shut off, all of the coal dust in the distributing system is returned to the pulverized coal plant, thus leaving no coal dust in storage in the works or at the furnaces.

With this system of distribution, there is no large combustion chamber built, nor is the existing furnace changed to any extent. The oil or gas supply is cut off and one or two small branches of pipe are brought down to the furnace with a valve near the main, fixed so that it can be operated from the floor.

The distributing main consists of spiral riveted pipe running overhead and feeding the furnaces. If there are ten or twelve furnaces, and it is desired to shut down one or more of them, the valves at the branches are closed and the automatic controller does the rest.

For getting rid of ash and smoke, the front side walls of the furnaces are built out and a sheet steel hood is placed directly across the front of each furnace, the bottom of the hood resting just above the work opening; each hood is tapered into a small pipe and connected to an exhaust main. At one end of the shop an exhauster is placed to which this exhaust main is connected and the contents are discharged into a separator placed outside of the building. Underneath the separator is a storage bin, from which the ash can be removed.

CHAPTER V

POWDERED COAL IN THE CEMENT INDUSTRY

AMONG the various applications of powdered coal, the first was in the manufacture of cement.

About forty-three years ago, Mr. William Sweet of Dilworth, Porter & Company, was using powdered coal, employing a screw and fan to inject the coal into the furnaces. The coal was simply crushed as fine as it could be between ordinary rolls and this lack of the fineness required for burning probably accounted for the failure of the project.

For the past thirty years there have been suggested many schemes for burning powdered coal in cement plants, under boilers and in heating furnaces. A large number of burners and processes have been introduced with varying degrees of success.

During the early years of the cement industry in this country, *oil* was employed as a fuel by spraying it into the lower end of the furnace with a jet of compressed air or steam. The use of oil was successful, but due to the increasing cost after 1895, very expensive. From 1897 to 1900 the increase in price was so great as to make the use of oil almost impracticable commercially. This fact has been the principal incentive for developing the use of powdered coal.

In 1894 a series of experiments on the use of powdered coal was begun by the Atlas Portland Cement Company. These were in immediate charge of Messrs. Hurry and Seaman, Chief Engineer and Superintendent respectively. They led to many discoveries, the invention of various devices and finally to the commercial development of the art. Hurry and Seaman are entitled to the credit of having been the first successful users of powdered coal in the cement industry. This use was begun in 1895 by the Atlas Company and has never been discontinued. Other engineers working along independent lines attained success a few years later. Possibly they received some assistance from information disseminated throughout the industry relating to the results obtained by Hurry and Seaman. At the particular date referred to, every mill in the industry jealously guarded information regarding details of manufacture as valuable trade secrets. Consequently, little or no direct information as to details of processes or machinery employed was common in the different mills. The information which leaked out was generally inaccurate and inferences were based on speculation or rumors. The success of the process of burning powdered coal in the Atlas plant was not generally realized until about 1900, when the process was put in operation in various other plants by independent investigators.

Portland cement is manufactured from a mixture of materials containing lime and silica, which are brought together in definite proportions and caused to unite in chemical combination. The raw material is principally carbonate of lime, or limestone in some form, with clay or shale. The materials are pulverized raw and mixed, either in the form of a dry powder or in a wet condition. They are then delivered to the kiln, where they are subjected to an extremely high temperature, at which the required chemical combinations take place. In the early days of the art, fixed kilns were employed, but at the present time the rotary kiln is almost universally used.

According to Prof. R. C. Carpenter (Trans. A.S.M.E., Vol. 36), the rotary kiln in its essential features was patented by Siemens in 1869, and in combination with a gas burner and other appliances, by Ransome in 1885. It was not found successful for cement burning in England, but was improved and developed in the United States by the Atlas Company about 1890, and by other American companies, to such a degree that it displaced practically every other method of burning Portland cement.

"The modern rotary cement kiln consists of a slightly inclined steel cylinder mounted on steel rollers and arranged so that it can be revolved. The upper end is connected with a stack or chimney which permits of the escape of discharge gases. The raw cement material, in the form of dust or 'slurry,' enters the upper end of the kiln. At the lower end of the cylinder is a stationary hood which affords a discharge opening for the burned material and which also acts as a support for the fuel-supplying devices. The rotary cylinders are of various dimensions. The tendency has been continually to increase the size of cylinder. Thus, for instance, in 1890 the rotary kilns were in some instances 4 ft. in external diameter and 40 ft. in length. From 1895 to 1902 kiln dimensions were quite generally 6 ft. in diameter and 60 ft. long. At the present time kilns 10 ft. in diameter and 150 to 200 ft. long are common. The Atlas plant at Hudson is equipped with kilns 12 ft. in diameter and 275 ft. long. In most of the late installations the kilns are true cylinders having the same diameter at each end; but in many plants kilns are to be found with the diameter at the top about 1 ft. less than that at the bottom, the two parts being connected by a tapered section forming the frustum of a cone.

"The rotary kiln is lined throughout with a fire-brick lining, except in rare cases where a very wet slurry is employed, in which case the lining for a short distance from the upper end is omitted. The temperatures in the combustion chamber required for burning cement clinker are from 2800 to 3000° F. To withstand these high temperatures a lining having high refractory qualities must be employed. It must also have the quality of withstanding decomposition by the chemical action taking place in the kiln. The problem of kiln linings has been a serious one. The lower part especially has to be repaired frequently unless conditions are unusually favorable."

The kiln is so operated as to keep the lining coated with the cement mixture for the purpose of protection.

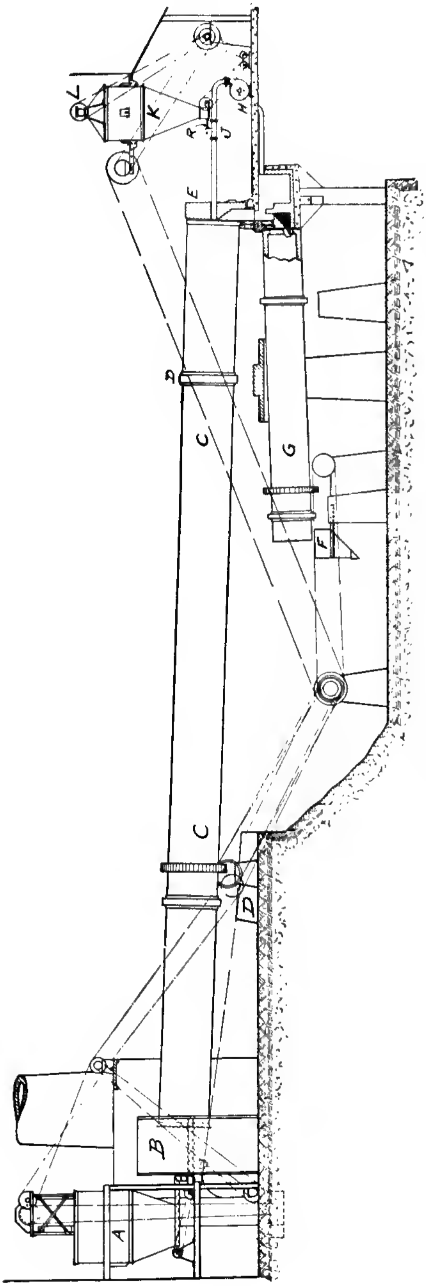

FIG. 22.—Rotary Cement Kiln.

Fig. 22 shows the general features and arrangement of the various operating parts of a typical rotary cement kiln. In this illustration the kiln is shown at *C*, the flue for discharge gases at *B*, the supporting rolls at *D–D*, the stationary hood at the lower end at *E*, the rotary clinker cooler at *G*, the clinker pit at *F*, the blower for supplying compressed air at *H*, the coal bin at *K*, the feeding injector for coal dust at *J*, the conveyer for delivering coal to the fuel tank at *L*, and the dust bin for raw material at *A*. The hood, *E*, is usually mounted on *rolls* so as to be easily moved away when repairing the kiln. It is customary to supply a separate stack for each kiln, although in some cases one stack received the discharge from two kilns. In a large installation it is customary to supply the air for several burners from one blower. In the installation shown, the blower draws in air which has first been warmed by passing through a rotary clinker cooler.

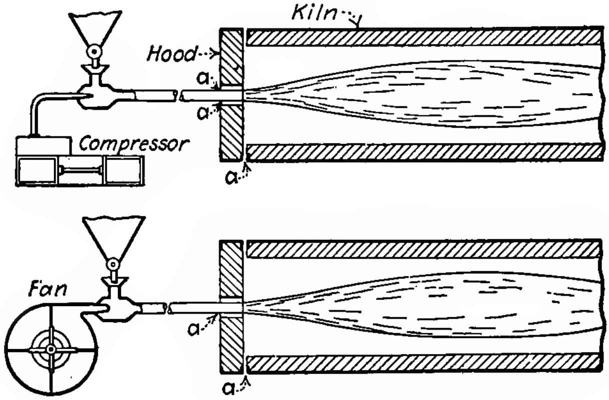

FIG. 23.—Injector for Cement Kiln.

Fig. 23 gives an idea of the character of the combustion which takes place in the burning of powdered coal in a cement kiln. The powdered coal is delivered to the kiln by a jet of air which impinges on the fuel dust with force enough to discharge the dust into the kiln. The compressed

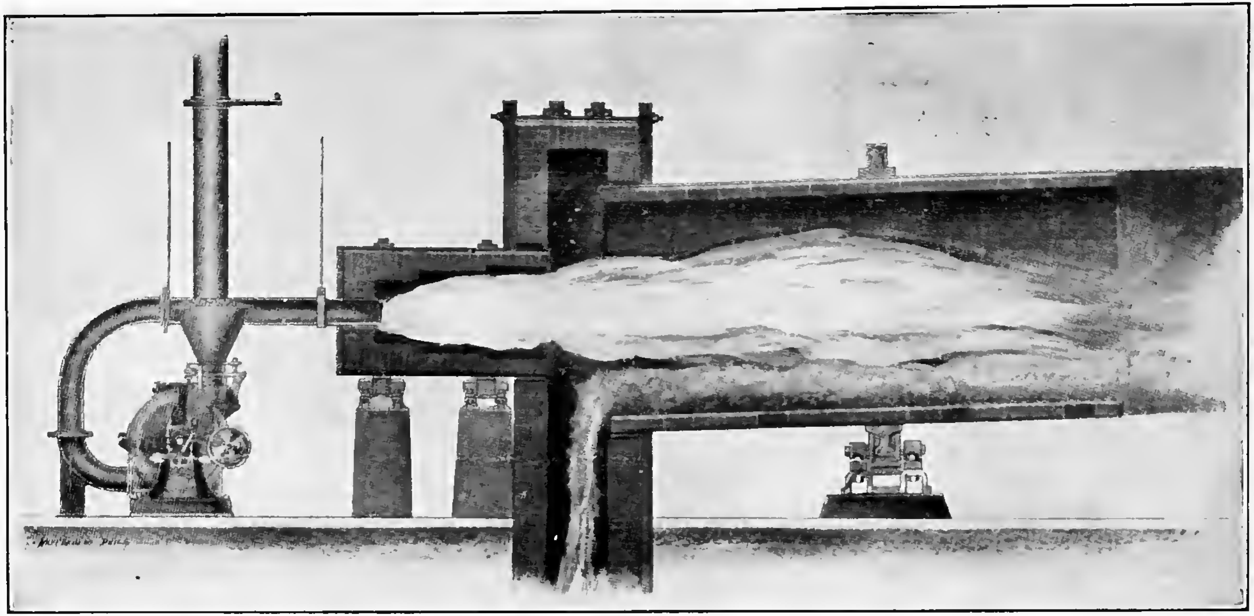

FIG. 24.—Elongated Flame in Cement Kiln.

air may be obtained from a fan or a compressor, as may be convenient; the illustration shows both schemes.

The injector varies greatly in different constructions, but in all cases it performs the function of injecting the coal dust into the kiln by a jet of air. It always consumes less than the amount needed for combustion. The additional air needed for combustion enters the kiln principally through openings in the hood and through the discharge duct for clinker. Such openings are shown in Fig. 23 by arrows at points marked *a*. The amount of air supplied by the compressors or fans should be sufficient merely to carry the dust into the kiln without producing a combustible or explosive mixture. The fuel dust enters the combustion chamber of the kiln in the form of a black cloud and burns like an elongated torch, as indicated in Fig. 24. The length of the flame in actual kiln constructions is generally from 25 to 40 ft., although this is affected by local conditions. The diameter of the flame in some places may be very nearly equal to that of the combustion chamber. Under the best conditions of burning the flame does not perceptibly impinge against the side walls of the kiln, and the heat utilized is practically all given off by radiation.

EDISON SYSTEM

In 1904, Mr. Thomas A. Edison designed and patented a method of burning Portland cement clinker by the use of powdered coal, which is described as follows:

The invention consists in a method whereby a greater amount of fuel may be consumed in kiln cylinders without raising the temperature to which they are now usually subjected. Thus the desired quality of material is secured, while the output thereof is largely increased.

" The rotary cylinder burners heretofore in common use for burning Portland cement materials consist of a cylinder about 60 ft. in length lined with fire brick and having an inside diameter of from 4 to 5 ft., the cylinder being set at a slight angle and the powdered coal being fed in at the upper

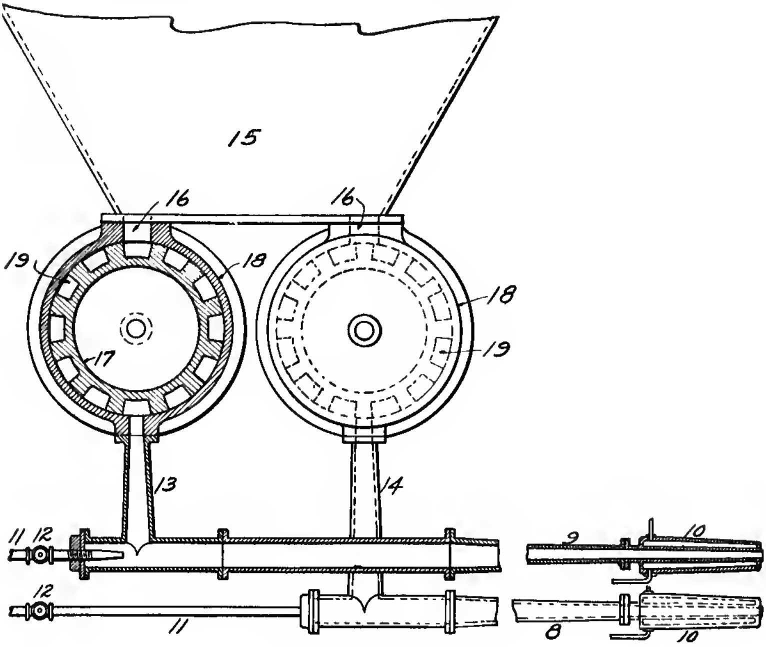

FIG. 25.—Edison System.

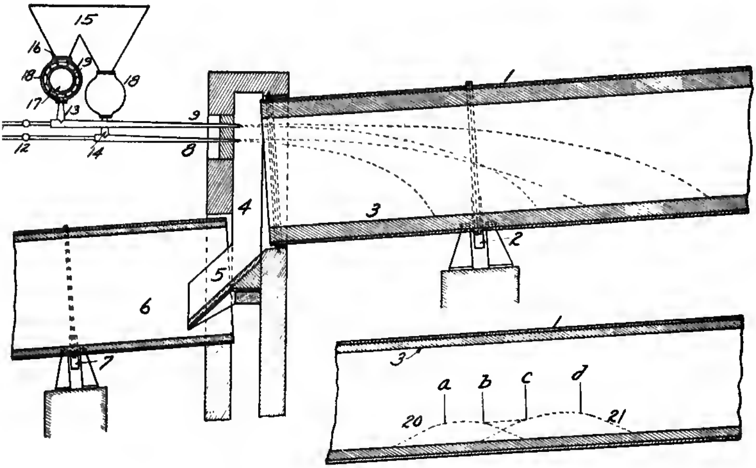

FIG. 26.—Edison System.

end thereof. The rotation of the cylinder, by reason of its inclination, slowly advances the material toward and out of the lower end. The speed of progression of the material lengthwise through the cylinder depends upon the speed of rotation and the inclination of the cylinder. The exit or lower end of the cylinder opens into a closed chamber provided with an orifice at the bottom through which the burned material may make its exit.

" With such cylindrical kilns as have heretofore been used, there is inserted in this chamber, in an axial line with the bore of the cylinder, a nozzle, through which (by means of compressed air) a stream of powdered coal is projected into the cylinder and there consumed. Total combustion of the powdered coal takes place within a relatively limited distance near the lower end of the cylinder, such distance being perhaps not over 20 ft. The very high temperature necessary for the final clinkering of the cement materials is restricted, however, to a much smaller distance —say about 8 ft. of the length of the cylinder. With cylinders of the dimensions indicated, and providing for total combustion of the powdered coal in approximately the distance mentioned, about 2800 lb. of cement clinker are produced per hour with an expenditure of about 800 lb. of coal dust, the maximum temperature reached being approximately 3000° F. The gases of combustion are swept forward in the cylinder and impart their heat to the advancing material, finally finding their exit through a stack at the feed end at which the cold material is introduced. The compressed air for projecting the powdered coal through the nozzle into the cylinder being insufficient to effect its complete combustion, the additional air necessary for that purpose is introduced through the exit orifice for the burned clinker. This supplementary air is drawn in by reason of the draft created by the stack and by the compressed air. The small amount of material which passes through the cylinder has so limited a capacity for the absorption of heat when it enters the contracted zone of high temperature that it effects very little lowering of temperature. In practice it is necessary that the temperature in the contracted zone, or in the zone of effective clinkering, should not vary except within narrow limits. If the temperature is too low the chemical reaction necessary to form good cement does not take place, or only partially so; while on the other hand if the temperature is too high the clinker will be nearly melted, and when thus over-burned, undesirable chemical reactions take place, making an improper cement. If with the proper proportions of coal and air, adjusted to produce the desired clinkering temperature, the amount of material fed into the cylinder is doubled, with a corresponding increase in the amount of fuel and air, then twice as much coal will be burned in substantially the same distance, and the temperature will therefore rise to so great an extent that the material will be over-burned and the fire brick lining of the cylinder will suffer injury. The additional amount of material fed will not be sufficient materially to lower the temperature in the clinkering zone, and hence with usual cylinders as now arranged and operated the output is nearly fixed and cannot be exceeded."

The Edison invention covers a method by which the output of material, with burners of the type described, can be very greatly increased. This is accomplished by altering the conditions of combustion and extending the area of high temperature, i.e., the clinkering zone, over a greater length of the cylinder. The kiln is thus enabled to burn a very much greater amount of fuel, and carry through the cylinder and properly burn a very much greater amount of cement or other material, without raising the temperature in any part of the zone of maximum heat above that required to secure proper results. To this end there are employed two or more combustion zones within the cylinder, each providing for a zone of clinkering heat. The point of maximum temperature of one zone is preferably made closely adjacent to the point of maximum temperature of the second zone, so as to secure anywhere between such points a sufficiently high temperature to obtain the desired clinkering effect.

In this way it is possible to secure within the burner a much larger proportional area of effective combustion with relation to the quantity of fuel used than is now possible.

To illustrate the principle generally, assume two nozzles to be employed, one being supplied with powdered coal and air at say, 50 lb. pressure per square inch, which serves to throw the fuel with great velocity into the cylinder, so that the center of its zone of combustion is say, 25 ft. from the exit end of the cylinder: and the other being supplied with coal and air at say, 20 lb. pressure, so that the zone of combustion thereof will be located between the first zone and the exit end. The columns of air and powdered coal from the nozzles, on account of their great velocity, pass into the cylinder for a considerable distance before spreading and before the temperature of either reaches the combustion point. By employing a number of nozzles, supplied with air at different pressures, and with the proper amount of coal fed into each, a very large amount of coal can be burned; and the extent of the zone of clinkering temperature may be increased. Thus the output of finished material may be largely augmented. In this way a considerable saving is secured in investment and operating labor per ton of output; while an additional saving is secured in the dimunition of the amount of coal necessary to burn a given amount of material, because of the diminished loss by external radiation.

In other words, by directing the different columns or streams of powdered coal within the cylinder so that the areas of combustion will, so to speak, " overlap," it is possible to secure an additional area of clinkering temperature or an additional zone of high heat; which cannot be secured with a single burning column of fuel or with a plurality of such columns of fuel separated to too great an extent.

KILN CALCULATIONS

Adequate drying of the coal is generally considered essential, although for some small plants the writer has seen kilns in operation on coal which had not been dried. Wet coal has a detrimental effect on feeding and on the capacity of the kiln. The effect of the moisture, however, depends upon the kind of coal, so that no limit can be definitely stated as essential to success in advance of a trial.

According to Carpenter, the weight of powdered coal required per barrel of cement varies somewhat with the character of the kiln and the character of the process. In the *dry* process of manufacture, the weight of coal is from 83 to 100 lb. per barrel of cement. In the *wet* process the coal varies from about 35 to 50 per cent of the finished product, that is, from 133 to 190 lb. of coal per barrel. The theoretical amount of coal required disregarding the heat due to the formation of silicates of lime and alumina, is probably not far from 30 lb. per barrel, provided 10,000 B.t.u. per pound of coal are utilized. Continuous *stationary* kilns are reported as consuming 12 to 16 per cent of fuel of from 45 to 60 per barrel of cement.

" The capacity of the modern kiln in barrels per twenty-four hours when operating on dry material with flue gases at about 1000° F. may be approximately expressed by the following formula:

$$C=\frac{D^2L}{24},$$

where C = capacity in 24 hours, in barrels of 380 lb.;
D = outside diameter in feet;
L = length in feet.

" The economy of the kiln has been increased by increasing its length. This is due in part to a change in process of burning: the CO being driven off from the material before it reaches the combustion zone in the kiln: and in part to a reduction of losses. The saving due to the use of a 150-ft. kiln in place of a 60-ft. kiln has exceeded 20 per cent in fuel, and in addition has cut down the labor required in operation more than one-half. Kilns can be operated with a stack temperature of less than 1000° F., but in such event the capacity is lessened and the result is generally an increase rather than a decrease in cost.

"Mr. Richard K. Meade, in his book on Portland cement, gives the following calculation as to the heat necessary per 100 lb. of raw material:

		B t.u.
Heat required:		
Decomposition of 75 lb. CaCO	75×784	=58,800
Decomposition of 4 lb. MgCO	4×384	= 1,536
		60,336
Heat supplied:		
Burning of 0.3 lb. sulphur	0.3× 4,050	= 1,215
Burning of 0.8 lb. carbon	0.8×14,540	=11,632
		12,847
Balance to be supplied by fuel:	60,336 12,847 47,489 B.t.u.	

"About 600 lb. of raw material are needed per barrel, so that the total heat required per barrel would be 284,934 B.t.u., disregarding the effect of the silicates. The combination of the silicates and lime gives off heat. The amount is in doubt as the exact resulting composition of the silicates is not known. A certain combination might produce 44,700 B.t.u. per 100 lb. of raw material; this is hardly possible as it would reduce the heat to be supplied to 2789 B.t.u. per 100 lb. of raw material or to 16,734 B.t.u. per barrel of cement. At 47,489 B.t.u., with coal evolving 10,000 B.t.u., the weight of coal per barrel of cement is $47{,}489 \times \frac{6}{10000} = 28.5$ lb.

"The principal cause of lack of economy in the rotary kiln is the excessive flue loss. Dr. Joseph W. Richard has reported the following distribution of heat losses in a 6 by 60-ft. kiln:

36 per cent due to excess air in chimney gases,
36.1 per cent due to excess temperature of necessary products of combustion,
10.7 per cent in hot clinker,
12.8 per cent in radiation and convection.

"The above investigation indicates about 72 per cent of flue loss of which one-half is due to poor operation and is preventable.

"In order to utilize the waste heat in the stack, it was arranged in the Cayuga Lake plant to pass the discharge gases of two kilns through a boiler and an economizer, the draft being maintained by a fan. It was also arranged to heat the air entering the kilns by drawing it through the hot clinker discharged from the kilns. The kilns were 60 ft. in length, 7.5 ft. in diameter at the lower end and 6.5 ft. in diameter at the upper end. The results are shown in Table 1.

Table 1

TWO KILNS 7½ AND 6½ BY 60 FEET

Coal consumed per hour, lb.	1,888
Clinker specific heat, 0.2	
Clinker produced per hour (CaO = 62 per cent), lb.	8,018
Weight $CaCO_3$ per hour, computed, lb.	8,875
Moisture in raw material, 3.1 per cent	
Weight CO_2 per hour from material, lb.	3,660
Weight of air supplied per lb. of coal, 44 per cent excess, lb.	16.1
Total weight of air supplied per hour, lb.	32,297
Weight of air supplied by coal feeders per hour, lb.	5,850
Total weight of gases discharged per hour, lb.	37,749
Heat discharged per lb. of gas, $0.23\times(1800-100)$, B.t.u.	391
Area of outside of kiln, sq.ft.	1,213
Area of hood exposed, sq.ft.	76
Gas leaving kilns, deg. F.	1,820
Air entering kilns, deg. F.	480
Gas leaving boiler, deg. F.	660
Gas leaving economizer, deg. F.	450
Temp. of kiln by optical pyrometer, lower third, deg. F.	2350–2960
Temp. of kiln by optical pyrometer, upper part, deg. F.	2960–1800

“From the data in Table 1, Table 2 has been computed, showing the approximate distribution of heat throughout the process.

Table 2

APPROXIMATE DISTRIBUTION OF HEAT

	B.t.u.	Per Cent.	
Heat entering kilns from clinker cooler....	2,041,000		
Heat entering kilns from combustion of coal	26,450,000		
Heat produced from chemical reactions....	632,206		
Total heat supplied....................	29,123,206	100.0	
Discharged from kiln to boiler............	14,859,859	51.2	
Discharged with clinker (8018×2×500) ..	4,409,540	15.1	
$CaCO_3$ decomposed (8875 lb. at 765 B.t.u.).	6,789,375	23.3	
126 lb. sulphuric anhydride liberated.......	238,140	0.8	
252 lb. water evaporated.................	303,200	1.0	
Radiation and unaccounted for...........	2,523,092	8.6	
Radiation per sq.ft. of surface of kiln per hr..	974		
Heat absorbed by boiler from kiln gases...	8,798,328	30.5	
Heat absorbed by economizer from kiln gases	1,178,998	4.0	
Stack loss and boiler radiation............	4,882,533	16.7	51.2

“The investigation thus showed that about 50 per cent of the heat was discharged into the stack and of that amount about 68 per cent could be utilized in a boiler and economizer so that the ultimate necessary flue loss was only about 17 per cent of the heat in the fuel.”

UTILIZATION OF WASTE HEAT

In the cement industry, very few attempts have been made to utilize the heat of the escaping gases. The reason why the waste heat has not been utilized to a greater extent is, no doubt, the difficulty of arranging and maintaining the waste heat boilers.

Although the temperature of the kiln stack gases has been considerably reduced with the advent of the long kiln, these gases are still discharged at temperatures which justify installations of equipment for the utilization of the heat in the large volumes of hot gases which are constantly discharged from the furnace.

One method of utilizing the heat in these gases stands out prominently on account of the economical results obtained. This system contemplates passing the kiln gases through a rotary dryer placed directly behind the kiln.

Such a dryer should be so proportioned in relation to the kiln that no condition can be produced which will tend to reduce the capacity of the kiln. The diameter of dryer should be at least equal to the bore of the kiln, so that the dryer will not have a dampening effect on the draft. The kiln and dryer should be served by separate stacks, of the same diameter and height, so that the kiln may be operated either independently or in unison with the dryer. The stack chambers serving the kiln and the dryer should be liberally proportioned, so that the gases will not be subjected to any interference as they leave either the kiln or the dryer. Between the kiln stack chamber and the dryer there should be a removable hood, to permit free access to the dryer without interfering with the continuity of operation of the kiln. A rotary kiln discharging its waste gases through a properly proportioned dryer will not only furnish sufficient heat for effectually drying the raw material for a number of kilns, but in addition will produce as much clinker per pound of coal as will the same size of kiln not coupled to a dryer. A kiln 8 ft. in diameter 120 ft. long, coupled to a dryer 7 ft. in diameter and 50 ft. long, kiln and dryer each being served by a 7-ft. stack, 100 ft. high, will have the same capacity and will show the same fuel consumption as an ordinary kiln of the same size discharging its gases of combustion to the atmosphere through a stack of the same dimensions as the stacks serving the coupled units.

CHAPTER VI

APPLICATIONS OF POWDERED COAL TO REVERBERATORY FURNACES

THE losses and nuisances arising from flue dust in blast-furnace smelting, no less than the better fuel ratio and tonnage obtained with powdered coal, are leading to a growing use of that fuel for reverberatory furnaces. The latter type of furnace also furnishes opportunity for the proper handling of converter slag derived from basic ores. The principal difficulty attending this application of powdered coal have arisen from the choking-up of flues by adhering layers of ash: and this difficulty is minimized by using straight flues free from abrupt changes of area. The deposit of a silicious surface over the charge is made impossible if the coal is positively and regularly fed to the furnace.

Two papers on this subject presented to the American Institute of Mining Engineers in February, 1915, describing plants of the Canadian Copper Co., Washoe Reduction Works and Anaconda Copper Co., are reproduced here by special permission of the writers, the late Dr. David H. Browne, Metallurgical Engineer of the International Nickel Co., and Mr. Louis V. Bender of the Anaconda Copper Mining Company.

(*Paper by Dr. David H. Browne*)

CANADIAN COPPER CO.

" The use of coal dust reverberatory furnaces was for the Canadian Copper Co. a matter of necessity, and not of choice. For twenty years smelting had been done in blast furnaces alone, and with the Herreshoff furnaces used prior to 1904 there was no trouble in treating fine ores. But little flue dust was produced, and this, following the time-honored custom, was wet down and put back with the charge. Whether the flue dust was really smelted or whether it was worn out by being chased around in a circle, was a problem that troubled no one.

" With the installation of modern blast furnaces and high-pressure blowing engines in 1904, flue dust commenced to assert itself. Evidently more dust was made than could be smelted, but so many vital problems engaged attention at this time that this minor question was pushed to one side.

" In 1906 details of blast-furnace smelting and the conversion of matte had been worked out to a satisfactory conclusion and the ever-increasing piles of flue dust and fine ore in the stock yard demanded serious consideration. Numerous experiments in sintering, briquetting, mixing with converter slag to form blocks of fine dust with green-ore fines and cement, and so on, were undertaken. None of these showed much promise. The problem was still further complicated by the question of treating converter slag. The ore was basic, the slag was not needed as a furnace flux, and it was felt that under these conditions the old method of pouring slag in molds and remelting in the blast furnace was an unnecessary expense. If the converter slag could be settled in basic-lined reverberatory furnaces, in which (at the same time) flue dust and green-ore fines could be smelted, two problems might thus be solved at once.

" Reverberatory practice with these ores was, however, unknown. As carried out in the West, on silicious ores and concentrates, at least 25 per cent of fuel was required, and even this ratio varied greatly with the skill of the fireman. The lack of skilled labor, the difficulty of recovering unburned coal from the ash by water concentration during Northern winters, and the difficulty of utilizing it, if recovered, in a plant using no steam power; the uncertainty of the effect of highly basic charges on the hearth and walls, and entire local unfamiliarity with reverberatory practice, caused a postponement of decision.

"In the Engineering and Mining Journal of February 10, 1906, Mr. S. S. Sorensen, describing certain experiments at the Highland Bay Smelter, called the attention of the metallurgical world to the possibilities of powdered coal as a reverberatory fuel. While Mr. Sorensen's experiments did not lead to the adoption of powdered coal at Highland Bay, they showed clearly that increased tonnage could be attained with decreased fuel consumption, and that such difficulties as he encountered were largely mechanical and presumably removable. Mr. Sorensen was probably the pioneer in the use of powdered coal in reverberatory furnaces.

"His experiences were supplemented by Mr. Charles Shelby, who in an able article in the Engineering and Mining Journal of March 14, 1908, described his investigation of the use of powdered coal in a reverberatory furnace at Cananea. Mr. Shelby experienced trouble from the sticking of ash in the flues and from the formation of a silicious blanket over his charge; but, until blocked by these conditions, he attained better results, both in tonnage and in fuel ratio, than had been obtained by grate firing. A profitable contract for the purchase of fuel oil led to the discontinuance of these experiments, but enough had been done to show that the subject was worthy of further investigation.

"In October, 1909, the Tepoe Valley smelter (of which Mr. Sorensen was the Superintendent) was visited by the writer. We went over the details of the Highland Bay experiments together and agreed that with proper attention to structural and mechanical details the troubles there experienced would be avoided. In the same month Mr. Shelby was interviewed regarding the difficulties encountered at Cananea. These also seemed avoidable. It was evident that if the problem could be worked to a successful issue, the fuel ratio, then usually about 4 to 1, might be raised to 6½ or 7 to 1. This warranted considerable expenditure in working out the details of practice.

"In visiting all of the prominent Western smelters in that year (1909), it was found that the proposal to use powdered coal on a large scale was received with more interest than enthusiasm. As a rule, investors were skeptical as to the expediency of starting a new plant on a practically unproved method.

" During the fall of 1909 Mr. George E. Silvester visited the cement factories in the Eastern states in order to study the proper method of grinding and burning coal. His report confirmed the opinion that the process was practicable, and during the winter plans were drawn for a reverberatory furnace plant to use powdered coal as a fuel.

" The mechanical difficulties encountered at Highland Bay and at Cananea consisted chiefly of two things, viz.: the stoppage of flues with accumulations of ash, and interruptions and irregularities in the coal-dust feed. It had been demonstrated in cement plants, however, that the operations of feeding and burning powdered coal could be made quite as continuous, as uniform, and as easily regulated as feeding fuel oil; provided only, that proper methods were used in the preparation of the coal.

" A plant equipped with the latest appliances for drying and pulverizing coal was therefore designed, to be located in a fireproof building, entirely separated from the reverberatory furnace building. Especial care was taken to specify that all bins, conveyors, etc., for the powdered coal, be made as nearly dust-proof as possible by the use of rubber gaskets, to eliminate the danger of dust explosions. To circumvent, if possible, the trouble from accumulations of coal ash, an entirely new arrangement of furnace flue was designed, the idea being to eliminate the several right-angled bends in common use, and to provide, as far as possible, a straightway course for the gases. In following out this idea, the skimming door was taken from its traditional position at the end of the furnace and placed on the side, entailing the sacrifice, apparently, of nothing but the tradition.

" As the furnishing of steam power from waste gases was not an essential feature of the installation, hydro-electric power being used in the plant, the waste heat boiler was made entirely a secondary consideration, and was situated so as not to interfere in any way with the straightway idea, whether in use or by-passed.

" In February, 1910, in company with Mr. Silvester, the Western smelters were visited to obtain information on reverberatory practice. Mr. Sorensen was keenly interested in Mr. Silvester's plans, in which he advised a few modifications of minor details, while approving the ideas as a whole.

" In April, 1910, the Canadian Copper Co. authorized construction, and work was begun at once. As the entire site of the proposed plant had to be raised 11 ft. above the yard level, and a large amount of rock cutting and filling was necessary on the hillside where the bins and approaches were planned, active construction did not commence until December 23, 1911.

" As built, the original furnaces were lined with basic brick, and the hearth was an inverted arch of magnesite. The furnaces went into operation before any means of drying the flue dust was provided, and during the winters of 1911 and 1912, a large amount of charge, wet and frozen as it came from the piles, was shoveled in through the doors of the furnace. All the converter slag was poured in; at first through a door near the fire end, just as scrap is charged in an open-hearth furnace.

" The introduction of so much cold air and cold material made it impossible to attain any satisfactory fuel ratio. During the first five months, 21,406 tons of cold charge and 43,463 tons of converter slag were smelted with 9609 tons of coal. This shows a ratio of 6.7 tons of total charge per ton of coal, but of only 2.2 tons of cold charge per ton of coal. However, as the cold charge was wet and often frozen, better results could probably not be expected.

" The combustion of fuel was satisfactory from the start, no trouble being experienced either in grinding or in burning the coal. The ash, while working on cold charges, choked and clogged the flue at the throat. This difficulty was not eliminated until later, when hot calcines were used and a larger tonnage was smelted. In general, the more slowly the furnace worked, the colder was the ash and the more it stuck and accumulated; while the faster it was driven the less did the ash hang back in the furnace. Under present conditions, with rapid smelting, the ash is a negligible factor.

" In the summer of 1912 the roof and side walls were repaired, and some facilities provided for drying the charge. In the winter of 1912 four wedge furnaces were built to roast green-ore fines. These went into operation in March, 1913. At this date we ceased to run converter slag in the reverberatory furnaces, since with the opening of No. 3 mine the blast furnace charge became more silicious and slag could be used economically as a flux.

" During the next year very pronounced improvements were made by Mr. Agnew, then Superintendent of the smelter, who with his foremen, Messrs. Kent, McAskill and Mason, worked out and adapted to our use a modification of the Cananea system of side-fettling. Long and shallow pockets were provided along the side wall, through holes in which the green-ore fines were fed to protect the sides. This naturally led to bricking up all the doors on the furnace, and marked improvement resulted from the exclusion of cold air and the insulation of the walls by a non-conducting and continuously renewed blanket of fines.

" As the walls were thoroughly protected by the charge thus introduced, the use of basic brick in the walls and hearth was no longer necessary, and the next change, in October, 1913, was to the silicious bottom and brick walls customary in Western smelters.

" In 1914 the fuel ratio and furnace practice were steadily improving. The figures for the first three months in 1914, one reverberatory being in use, are given in the tabulation below.

1914—CANADIAN COPPER COMPANY

	January.	February.	March.
Furnace, days	31	28	31
Calcines, tons	10,020	9,460	10,860
Blast furnace, flue dust, tons	906	922	847
Wedge furnace, flue dust, tons	171	193	180
Converter slag, tons	69	248	0
Green-ore fines and samples, tons.	1,731	1,326	2,308
Total charge, tons	12,897	12,149	14,195
Coal, tons	2,575	2,150	2,094
Charge per day, tons	416	434	458
Coal per day, tons	83	77	67
Ratio of charge to fuel	5.0	5.65	6.77

" In the summer of 1914 a change was made in grinding the ore fines for the wedge furnace. The ore, which was previously too coarse to make a good calcination, was treated in ball mills, and screened, so that only about 14 per cent remained on a 20-mesh screen, instead of the former 40 per cent. This finer-crushed ore could not be produced in sufficient quantity to keep the furnace up to its capacity. Furthermore, when the calcines dropped, on account of this finer grinding of the ore, from 13 per cent of sulphur to 7 or 8 per cent, the production of slag increased and the production of matte fell off. These conditions, with the shortage of calcines, militated against a high ratio of charge to fuel, and in June, 1914, the fuel ratio was 5.35.

" The above narrative is introduced to show the gradual development of the process, and the conditions which have brought about changes from the original plans. We now consider some details of construction.

" The area occupied by the reverberatory-furnace building was raised about 11 ft. above the surrounding yard by pouring furnace slag between concrete retaining walls, which were protected as the filling progressed by spreading clay against the concrete. At distances of 56 ft. apart, on the center lines between the furnaces, tunnels 12 ft. wide were provided in this slag foundation. These tunnels were to carry tracks so that the reverberatory furnaces built on this poured-slag area could be tapped into pots at the level of the yard. The furnaces are skimmed into 25-ton pots at the yard level. (Figs. 27 and 28.)

" Under the lines where the furnace side walls were to go, concrete footings were introduced, and between these footings transverse rods were laid in iron pipes. Then the slag pouring was continued. The tie rods carried anchor-plates which held the footings under the furnace walls together and took up the lateral thrust at the foot of the side buckstays. Under the furnace hearth, the slag filling rose 12 in. above these concrete footings. On the concrete footings were erected the silica-brick furnace walls.

" The horizontal dimensions of the furnace are 23 ft. 6 in. by 116 ft. 9 in., outside of the brickwork.

" The side walls arising from the footings inclose 12 in. of poured slag which extends under the silica hearth. The side walls are carried up 27 in. in thickness to a height of 3 ft. 4$\frac{3}{4}$ in., making the total height of the side walls 8 ft., 9$\frac{1}{4}$ in., up to the point where the cast-iron skew block is laid for the arch roof. This height is maintained for a distance of 34 ft. from the fire end, from which point the skewbacks slope down to correspond with the slope of the arch roof referred to above.

" The end or fire wall is 3 ft. 6 in. wide at the bottom for a height of 2 ft. and is then stepped back to 22$\frac{1}{2}$ in. at a height of 3 ft. 8 in., and again stepped back to a width of 13$\frac{1}{2}$ in. at a height of 6 ft. 3 in. At the other end of the furnace, commonly called the skimming end, or front, the construction is very heavy, to resist the end thrust of the hearth. It consists of a brick block, 6 ft. wide and 3 ft. high, which is stepped back to a width of 2 ft. 6 in. at the throat, at which point it is 4 ft. 9 in. high.

" The roof at the fire end is of 20-in. silica brick. The

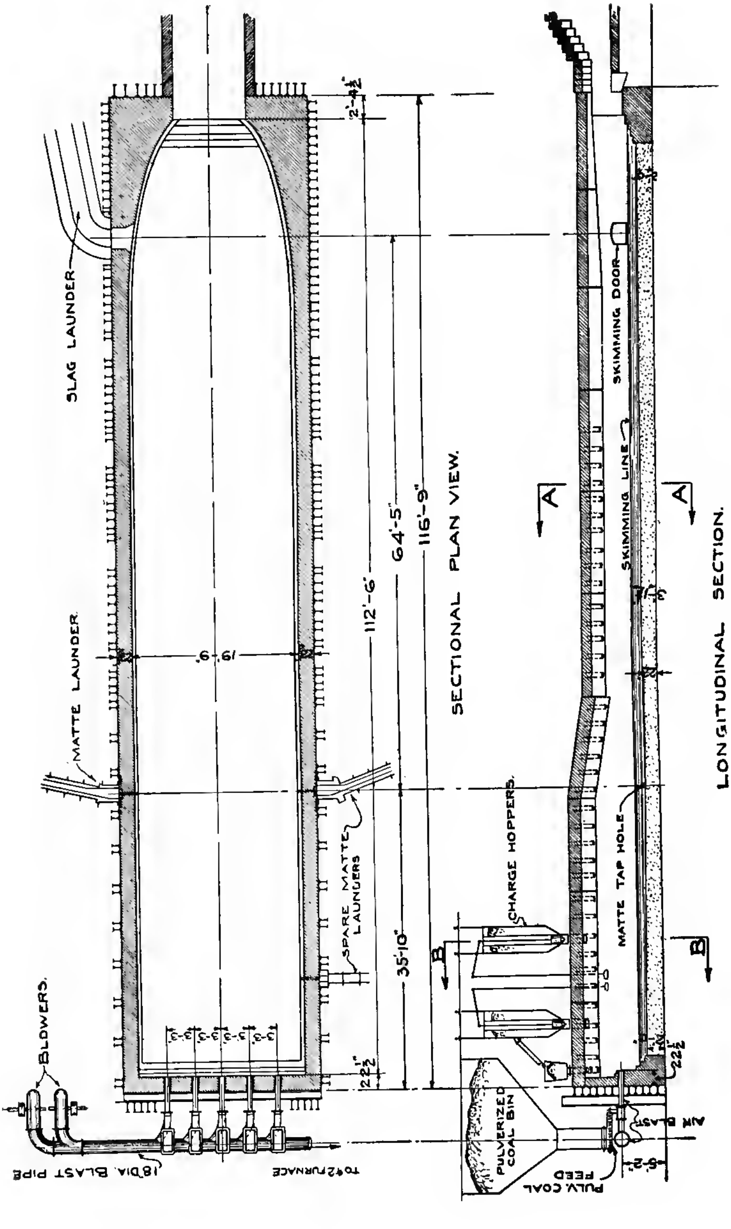

SECTIONAL PLAN VIEW.

LONGITUDINAL SECTION.

FIG. 27.—Reverberatory Furnace Using Powdered Coal.

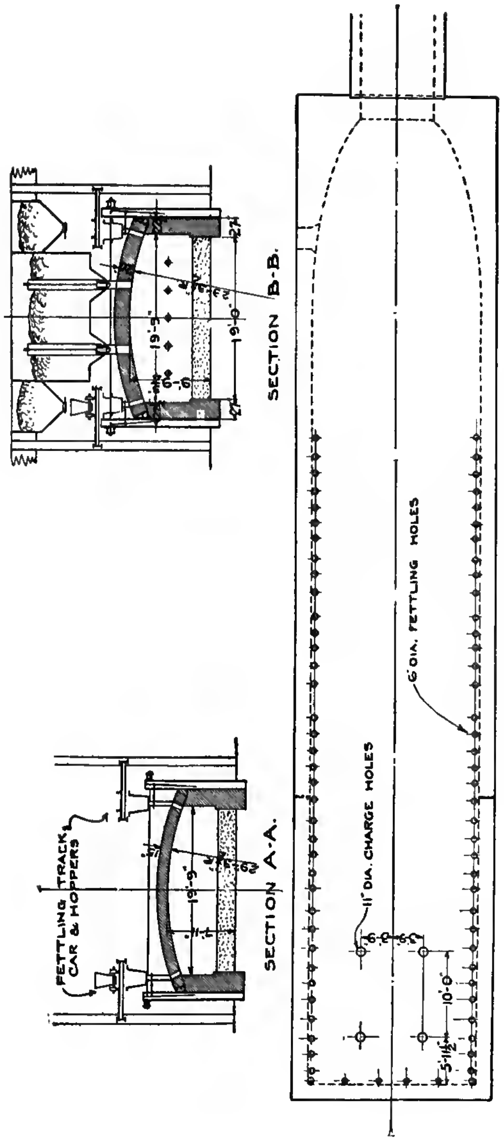

FIG. 28.—Reverberatory Furnace Using Powdered Coal.

height at the skewback is 7 ft. 9¼ in. above the bottom of the quartz hearth. The central line is 9 ft. 9¾ in. above the same point. The radius is 29 ft. 3½ in. on the under side of the arch.

" When the hearth is in, the inside arch at the center is from 7 ft. 9¾ in. to 7 ft. 11¾ in. above the top of the hearth and about 6 ft. 8 in. above the skim line, or 4 ft. 8 in. above the center line of the coal dust nozzles.

" This height of arch is maintained for a length of 34 ft. from the outside or fire wall. In the next 12 ft. the arch drops 22¾ in., giving a height of from 5 ft. 11 in. to 6 ft. 1 in. above the top of the hearth and about 4 ft. 10 in. above the skim line. This height is continued straight through to the throat of the furnace.

" The 20-in. silica arch bricks are used for 34 ft. on the straight arch and for 12 ft. more on the sloping arch. The remaining portion of the roof is of 15-in. brick. As the height of this roof has been changed at various times, the heights given for the roof at various points are not exactly correct at present.

" There are no side doors to the furnace. As originally built, doors were set on 12-ft. centers, but these have been filled up, so that the side walls present a continuous face of silica brick 22½ in. thick.

" The hearth is silica sand tamped in place. No binder has been used, though better results might have been obtained had some base been introduced. After about five days firing, 50 tons of high-grade matte were put in to saturate the bottom. If steam from the silica sand came through the walls the heat was cut off for twenty-four hours to allow the moisture to escape. Some patches of bottom floated up, but not enough to interfere with subsequent operations. This bottom is almost flat, being 24 in. thick at the end walls and 22 in. thick at the tap hole, 36 ft. from the fire wall. In building the side walls, wood strips were introduced to provide for expansion. These wood strips (¼ in. thick) were placed every four bricks on the inside and between every six bricks on the outside. As these burned out they allowed the brick to expand horizontally. The arch is laid in separate sections 10 to 12 ft. wide, with the usual wooden expansion wedges 2 or 3 in. thick between sections.

" The side walls, built as described, are carried straight to a point 26 ft. from the throat, where they curve inwardly, the space of 19 ft. 9 in. between them being narrower up along the line of gradually increasing curvature to a width of 8 ft. 8 in. at the throat. At this point the opening is 4 ft. 3 in. high at the center and 3 ft. 9 in. at the sides. The arch here is about 4 ft. 8 in. above the skimming line.

" From the throat a straight flue 8 ft. 8 in. wide leads to the waste heat boilers and to the stack. Openings are provided along the side of this flue for cleaning out any deposited ash. An opening opposite the throat is provided by raising the bottom of this flue about 18 in. above the throat and introducing a door in the space thus formed. This is useful for removing any accretions of ash fused in the throat. The skimming door is placed on one side of the furnace, 16 ft. 6 in. back from the throat. This door, 2 ft. 6 in. wide by 15 in. high, allows slag to run off down to a skimming line 14½ in. above the hearth at the tap hole. The slag can rise 6 in. above this line before reaching the level of the side doors now bricked up. Outside the skimming door a cast-iron clay-lined box is provided to trap any matte carried over. From this the cast-iron slag launder curves to a line almost parallel with the furnace and delivers the slag into 25-ton pots, which are brought in on track at right angles to the furnace under the flue.

" The furnace is fed in a rather peculiar way. When the furnace was started, almost all of the charge was introduced through two charge hoppers near the fire end, as in usual Western practice. The first hopper delivered through two openings, 11 in. in diameter and 7 ft. 6 in. apart, and 8 ft. from the outside of the fire wall. The second hopper delivered through two similar openings 18 ft. from the fire wall.

" At present almost all of the charge is introduced through hoppers along the side walls. Directly over the side walls, at the fire end of the furnace, large bins are provided, which discharge into small bottom-dump cars. These cars run on 24-in. tracks which are supported from overhead. Under these tracks a long trough runs down each side of the furnace just above the side walls. These troughs are filled from the cars on the track above them. Each trough has openings in the bottom, 2 ft. apart, which openings communicate by a slide gate with 6-in. iron pipes. These pipes pass into holes drilled in the roof bricks, which allow the charge introduced through these openings to slide down on the side walls over which this charge forms an almost continuous blanket. As there are no doors on the furnace, and as the 6-in. pipes are clayed into the openings in the roof, it follows that no air is introduced into the furnace except what is purposely introduced at the fire end.

" These pipes form a continuous line of charging holes, which extend the entire length of the furnace. The charge on the side opposite the slag door is fed all the way to the throat. On the slag side it is fed along as far as the slag door and no farther, as the cold air coming in while skimming cools the walls from the skim door to the throat and obviates the necessity of charging beyond this point. Six similar openings are used in the fire wall.

" The walls are held in place by 12-in. I-beams in pairs, with a space of 5 ft. between each pair, which form the side braces. These are wedged in at the bottom, by wooden wedges, against an iron strap in the concrete footings. The concrete footings are tied together as previously described by 1½-in. rods passing across the furnace.

" The coal dust is introduced through five pipes, 5 in. in diameter. One of these pipes is on the center line of the furnace, the others are in horizontal line with it at a distance of 3 ft. 3 in. from center to center. These pipes are 5 ft. 2 in. above the bottom of the sand hearth, or 3 ft. 2 in. above the top of this hearth. They are about 2 ft. above the skimming line of the charge and the central pipe is about 4 ft. 8 in. below the highest point of the roof.

POWDERED COAL APPARATUS

" The coal as received is $\frac{3}{4}$ in. and under in size and contains about 7 per cent of moisture. It is dried in a Ruggles-Coles dryer, 70 in. in diameter and 35 ft. long. One ton of coal burned on the grate dries 40 to 50 tons of slack coal to about 0.5 per cent of moisture, which increases to 2.4 per cent of moisture after grinding. About 10 tons of slack are dried per hour of running time. The coal is ground in Raymond impact mills. About 95 per cent passes a 100-mesh and 80 per cent a 200-mesh screen.

" The powdered coal is sucked by a fan to separators above the roof of the dryer building and slides downward into a screw conveyer which delivers it into bins at the fire end of the reverberatory furnace. The dust is fed from these bins by Sturtevant automatic-feed screw conveyers, one for each nozzle, the speed of which can be regulated. These screws carry the dust forward and drop it into the air nozzles about 2 ft. from the point where the nozzles enter the furnace. Any coal delivery pipe can be closed off by a slide gate, and any screw conveyer can be stopped by disconnecting the bevel gears attached thereto. In this way any desired number of the five burners can be run, and at any desired speed within wide limits. The amount of air delivered to each nozzle can be varied at will or cut off entirely.

" As a rule the five burners are in operation. Each delivers about 13.5 tons of coal dust a day or about 19 lb. of coal per minute at the furnace. The total coal blown in is about 67 tons per day.

" The dust drops from the conveyers into the air pipes, which carry it forward into the furnace. The air is supplied by a 4-ft. Sturtevant fan, running at 1300 to 1400 revolutions per minute. The air supplied by this fan is insufficient for the combustion of the coal. Openings are left in the end wall between the coal burners. These openings are stopped by loose bricks, so that the amount of air is readily controlled. The draft at the fire wall is about 0.25 in. of water and at the throat the maximum draft is about 1.2 in. The combustion is very good. One test made for ten days (Jan. 9 to 19, 1914) showed the following averages:

Coal consumption, tons in 24 hours	69.7
Gas temperature at throat, deg. C	922
SO_2 and CO_2, per cent.	12.3
Oxygen, per cent.	6.5
SO_3, per cent.	1.14

" During this test the average charge was 409 tons in 24 hours. This shows a ratio of 5.9 parts of charge to 1 part of coal, but much higher ratios have been attained. The average for March, 1914, was 6.84. This coal ratio depends largely upon the composition of the charge and the nature of the slag produced.

" A criticism might be made of the low temperature of the gases at the throat, 922° C. The usual practice in Western smelters is to carry a temperature of 1200 to 1300° C. at this point, and it might be thought that this low temperature indicates inefficient firing. The fact is that the heat of combustion is utilized in smelting ore along the side walls, and consequently the escaping gases, having done more work than is usually the case, are relatively cold. The function of a reverberatory furnace is to smelt ore, and not to raise steam, and for this reason the more heat that is absorbed from the coal gases in the furnace, the more efficient is the operation and the cooler are the escaping gases.

" The great advantage of coal-dust firing in applications of this sort is the absence of the usual breaks in the temperature curve due to grating or cleaning the hearth, and as a consequence a greatly increased tonnage and fuel ratio. The operation of firing, being purely mechanical, comes under the immediate and direct control of the furnace foreman and responds instantly to his regulation. In addition to this, the peculiar method of feeding by almost continuous charging obviates breaks in the temperature curve due to charging or ordinary fettling. For these two reasons the chart of temperature shows a horizontal line, rising or falling in almost exact accordance with the speed of the coal-feeding device.

" The maximum bath of matte and slag is 22 in. deep. A constant bath of 8 in. of matte is carried. This matte lies 6 in. below the skimming plate, so that after skimming there are 6 in. of slag and 8 in. of matte left in the furnace, making a total minimum depth of 14 in. The skimming door is banked up 8 in. with sand, so that just before skimming the slag is 14 in. deep. As the charge along the side walls occupies a great deal of room there is never at any time more than 40 or 50 tons of slag in the furnace.

" In rebuilding this reverberatory or in designing a new plant, the hearth should be widened to provide for a larger body of matte, which experience has shown to be necessary. As this method of burning coal and of admitting the charge into the furnace bids fair to come into general use, it is expected that many changes, both in construction and operation, will be introduced. There is no doubt that reverberatory smelting along these lines will become cheaper than blast-furnace smelting and that a wider range of ores can be used in such a furnace than in the old style coal or oil furnace."

(*Paper by Mr. Louis V. Bender.*)

WASHOE REDUCTION WORKS

" After investigating the work of coal dust at the Canadian Copper Co. the management of the Washoe plant decided to experiment with and ascertain the advantages of using powdered coal as fuel in their reverberatories. Consequently, during the month of June, 1914, one of their reverberatory furnaces was changed to use powdered coal as fuel. The results obtained by this method of firing are gratifying and show a decided saving in cost of smelting as compared with grate firing of ordinary coal.

" The furnace as remodeled is 124 ft. long by 21 ft. wide, and varies in height from 8 ft. 6 in. at the back to 5 ft. 7 in. at the skimming end. The general construction of the furnace is similar to that of other furnaces at this plant. There are no side doors to this furnace, as it was thought that with the present arrangement for feeding no fettling or claying would be required. The interior of the furnace can be inspected through the burner portholes, after shutting off the burners and giving a few seconds' time for the gases inside the furnace to clear away. The charging is done on either side of the furnace from longitudinal hoppers, extending a distance of 74 ft. from the back end of the furnace. Leading from the hoppers into the furnace are 6-in. pipes spaced 19¼ in. apart, through which the charge is intermittently dropped. The charge is kept well above the slag line at all times; in this way the side walls are protected and no fettling is needed on this portion of the furnace. The remainder of the furnace requires fettling. After operating for three months, it was found that the bricks were eaten into along each side wall from the skimming door back to the point where the charge had been dropped. The depth of this cutting away was 8 in. close to the front end and gradually tapered to zero at a distance of 50 ft., and was greater on the side of the furnace having the larger flue connection. Hoppers will be put in for the entire length of furnace, from which fettling material will be dropped, to prevent this cutting.

" After a run of three months the roof was in excellent condition. At the back of the furnace the bricks were not cut into at all; at 30 ft. from the back end they were eaten away 2 in., but at 60 ft. distant they were as put in. The roof is 20 in. thick. After operating for a while trouble was encountered in tapping the matte. The tap hole was on the east side of the furnace 83½ ft. from the front end. Charging could not be done over the tap hole, or for a distance of several feet on either side; also, owing to the method of charging, matte accumulated in the front of the furnace and could not be completely drained through the side tap hole.

“When the furnace was down for fettling in front, it was seen that the calcines fed into the furnace sloped very gently from either side to the center. This, of course, took up the space which in other furnaces is filled with matte and forced the matte to the front of the furnace and also prevented its being drawn out at the side tap hole. The furnace will not hold more than 50 tons of matte. The other furnaces hold 175 tons. It was finally decided to tap the furnace at the front. A suitable runway was put in and a tap hole made at the side of and below the skimming door, and all of the matte was tapped therefrom. About 35 tons of matte are tapped per shift. The furnace is skimmed three times per shift. The gases are taken from the furnace through brick flues to either of the two batteries of Stirling boilers, each battery developing 650 horse-power. One of the flue connections was left as before, with a cross-sectional area of 13½ sq.ft.; the other flue connection has a cross-sectional area of 40 sq.ft. The smaller flue connection is used whenever it is necessary to clean the boilers connected with the larger flue. This occurs once a month and lasts for a period of three days, during which time the tonnage smelted is considerably less than when using the larger flue. The following figures verify this statement:

Cross-section of Flue, Square Feet.	Average of Tons.	Fuel Ratio.
13½	3 days 405	6.8
40	3 days before cleaning 497	6.7
	3 days after cleaning 539	7.3

ANACONDA PLANT

" The following equipment is installed. It is larger than is required for one furnace, but was installed with the idea in mind of finally equipping the entire reverberatory plant for coal-dust firing.

" The coal from the storage bin is fed into a 30 by 30-in. Jeffrey single roll crusher, where it is reduced to 1 in. maximum size. After passing a magnetic separator, it is elevated and fed by gravity into a 40-ft. by 6 ft. 8 in. Ruggles-Coles dryer. The dryer consists of two cylinders, the one within the other. Blades of angle iron are fastened to the inner side of the outer cylinder and the outer side of the inner cylinder, so arranged that as the dryer revolves the material fed into the space between the cylinders is lifted and dropped onto the inner cylinder and at the same time carried to the discharge end. The outer cylinder at the discharge end extends beyond the inner cylinder and has a revolving head riveted to it; on the inside of the head are buckets which lift the coal and deliver it out through the central casting. It takes a particle about thirty minutes to pass from feed end to discharge end of the dryer. At the feed end the inner cylinder is extended beyond the outer cylinder and, passing through a stationary head, is connected with a fire box. The gases are drawn from the fire box by means of a 72-in. Sturtevant fan, forward through the inner cylinder and back through the annular space between the cylinders to the stack. This exhaust fan is placed on top of the fire box and is connected to the dryer by means of a 30-in. sheet-iron pipe. The fire box is fed with lump coal. The capacity of a dryer depends upon the moisture in the coal and the speed of the fan. With Diamondville coal, 18 tons are dried per hour. During the month of September, 1914, 30 tons of coal were used to dry 1,984.77 tons of coal.

" From the dryer the coal is conveyed by a screw conveyor, and is discharged into a steel bin above the pulverizer, which is in a separate building from the dryer. It is not well to have the pulverizer in the same building with the dryer, for the reason that if an accident should occur, causing the coal to overflow, it might then be drawn into the fire chamber of the dryer and cause a fire, with possible injury to employees.

" The Raymond five-roller mill is used. It has an average hourly capacity of 4½ tons (see Chapter III). A fan is connected to this mill, from which air is admitted underneath the grinding surface. The material is taken away by the air current as quickly as it is reduced by the rolls, and blown into a cyclone dust collector placed 20 ft. above the pulverizer. The mill is thus free of fine material. The collector is of galvanized steel, cone shaped, and has a return air pipe leading from it to the housing around the base of of the mill. A surplus air pipe from this return-air pipe relieves the back pressure and is an outlet for any surplus air that may enter with the feed. An auxiliary collector is placed to receive the dust escaping through this surplus air pipe.

" The finished product is discharged through a spout at the bottom of the dust collector, and is taken by a screw conveyor to a bin placed near to and above the furnace.

" The coal from the bin is introduced into the furnace by means of an air current delivered through five ' burners.' The air current is produced by a No. 11 Buffalo fan at a pressure of 10 oz. and, by means of a pipe carrying a nozzle, is introduced into a 6-in. pipe leading into the end of the furnace. The coal dust, fed from the bin by a screw conveyor, drops upon this nozzle (which acts as a spreader) and is mixed with the air and taken into the furnace. A secondary supply is obtained around the portholes through which the burners are projected into the furnace. These portholes are each 12 in. in diameter, which leaves an annular space 3 in. wide around each of the 6-in. pipes. By means of suitable dampers encircling the burners, this secondary air can be regulated. Another source of secondary air is through four openings between and above the burner ports, the size of the openings being regulated by putting in or taking out brick. The amount of coal fed is determined by the speed of the screw, which is controlled by a Reeves variable-speed regulator. The grinding, conveying, and bin system, from the dryer to the burners, is made as air-tight as possible, with the result that the entire plant is extremely clean and free from dust."

CHAPTER VII

POWDERED COAL IN METALLURGICAL FURNACES

Powdered coal is manifesting distinct advantages for all kinds of heating operations. With the constant demand for increased output in manufacturing plants, the question of industrial heating, important though it is, is too often lightly considered or entirely overlooked, with the result that worth-while savings in cost of manufacture are not made.

Heat treatment is the basis of many operations in shops and to make it good and cheap requires more than the mere burning of coal or oil. The cost of fuel is not as important as is the question of what can be derived from it; and this depends on how the fuel is utilized. The number of heat units obtained for a cent does not determine the quantity or the quality of the product obtained for a dollar, any more than the price of gasoline determines the cost per ton-mile of running an automobile. If furnaces are so designed as to utilize powdered coal to the best advantage, and the coal dust is economically conveyed, fed and regulated at the furnace, leaving no residue of fine particles of dust on the work; and if the smoke and ash are properly carried away; this fuel meets all reasonable requirements. Powdered coal gives a better and softer heat than any other fuel in use at the present time.

The economy of powdered coal over oil is established, and is probably the one factor that is mainly responsible for the present active interest in its application. Systems have been installed to replace oil where there has been an actual saving of 60 per cent. This is certainly worth while. As compared with producer gas plants, the manufacturers of the latter apparatus bring forward many arguments in its favor; but with an initial loss of 20 per cent or more in the process of manufacture of gas, there is every reason to

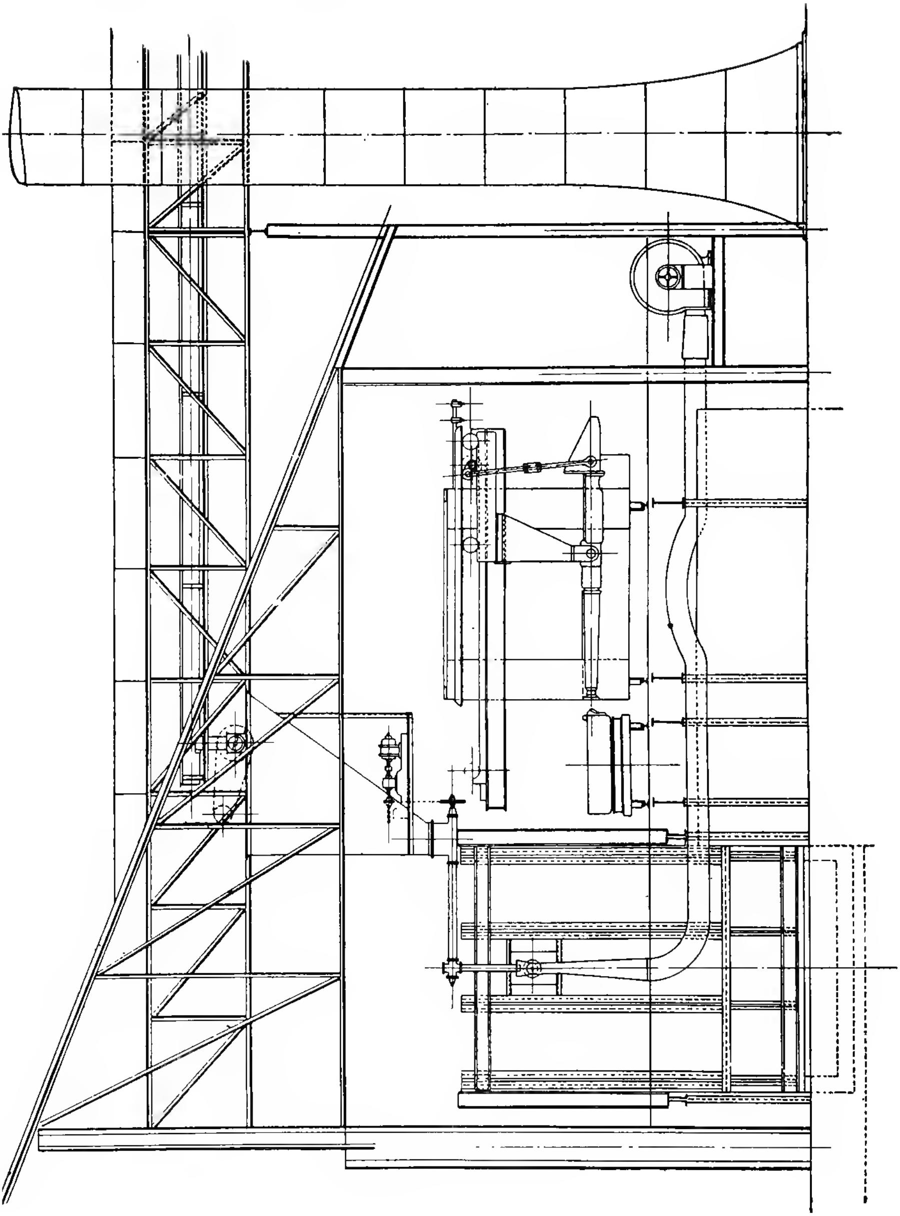

FIG. 29.—Powdered Coal in Open Hearth Furnace.

believe that powdered coal has the advantage. Here every unit of heat is projected into the furnace: and in the furnaces, it is expected, equal efficiencies will be realized from powdered fuel and gas. Producer gas has its place where checker work and ash troubles are objectionable. Where the ash can be taken care of, there seems to be a saving by the use of coal amounting to about 25 per cent.

Some manufacturers of powdered coal installations argue that the proper way to measure efficiency is on a B.t.u. basis. In other words, if a furnace performing a certain heating operation uses 20 gallons of fuel oil per hour, each gallon of oil containing 140,000 B.t.u., there will be consumed 2,800,000 B.t.u. in the operation. On this basis, it will require 2,800,000 B.t.u. in coal in a pulverized state to perform the same operation, the superior efficiency of coal arising from the fact that the 2,800,000 B.t.u. in oil would cost more than the same number of B.t.u. in coal. This fact is obvious; for if fuel oil costs 5 cents a gallon, coal (at 14,000 B.t.u. per pound) would have to be sold at $10 a ton to give an equivalent cost per B.t.u.

But this comparison does not by any means measure the efficiencies of heating furnaces, for the real problem is one of heating cost and not of fuel cost. Powdered coal, or any other fuel, in substitution for what is now in use, should not be chosen for the mere reason that it has a lower B.t.u. cost; but, rather, one must select a fuel which, all things considered, will show the lowest *production* cost under existing conditions in the shop.

Production costs depend on three things; the input, the output and the operator; and in no two shops are these three conditions similar. Each shop, on account of its conditions, requires a separate study to determine what will lead to highest efficiency in heating operations.

In order to determine the efficiency with a new fuel in comparison with a fuel now in use, the following observations should be made:

Start the furnace at the temperature of the room, raise it to a certain final temperature and note the time taken for this operation, both with the fuel now in use and with the new fuel contemplated.

Then take the furnace at the temperature of the room and put in a certain amount of material at the same temperature as the furnace; and raise both the furnace and the material to a certain final temperature, noting the time consumed in this operation, for each of the two fuels in question.

Lastly, start the furnace and material, at the temperature of the room (or at any desired temperature), and operate the furnace in the regular manner. Note how many pounds of material are raised to a certain final temperature, with the number of pounds of coal, oil or gas expanded, in order to perform this operation. Unless the new fuel shows better results in these respects than the fuel formerly used, it is not more efficient, notwithstanding arguments by the manufacturers to the contrary. If powdered coal, tried out in this manner, does not produce effects superior to those from fuels formerly used, it is not more efficient.

At a meeting of the American Institute of Mining Engineers in 1913 Mr. H. R. Barnhurst presented a discussion from which the following is abstracted. The proper method of firing powdered coal is to admit with the fuel the exact quantity of air necessary for the result desired, as shown by observation, and to maintain the relationship between fuel and air as long as the conditions desired are being realized.

This matter of complete control of the two factors, fuel and air, is and will be at the root of all success with pulverized or sprayed fuel in the metallurgical processes.

It is unfortunate that in the present state of our arts it is difficult to obtain exact readings of the temperatures attained in the burning of fuel. We do know, however, that a definite quantity of air will deliver the oxygen required to give the highest attainable temperature from a given fuel. With a knowledge of the components of the fuel, the laws of thermo-chemistry tell us not only the quantity of oxygen we must have, but also the maximum attainable temperature.

Applying these laws further, we learn that any air or oxygen supplied in excess of the ideal requirement simply dilutes the products of combustion and lowers the temperature; also, that insufficient air and oxygen will cause the burning of part of the fuel to CO, and part of it to CO_2. With the air supply halved, we obtain only the poisonous and inflammable CO. However short we may be of pyrometers, there is in the eye of the intelligent operator a gauge which tells him at a glance whether the heat he has is serving his purpose. Pulverized coal is at a great advantage in this respect.

It need not be supposed that an operator must be perpetually adjusting his apparatus. If we find that with the air gate fixed at a certain opening the fire is too hot, a simple reduction in the quantity of fuel admitted changes the ratio of air to fuel and lessens the supply of heat. If the fire is not hot enough, more fuel gives more heat units and a lessened excess of air, resulting in a heightened temperature.

In all probability, some excess of air must always be admitted to keep the temperature from reaching destructive limits. With control of both the quantity and quality of heat, this danger is negligible.

The temperatures used in metallurgical work usually cover a range of nearly 2000°, or say from 2000 to 4000° F. By ordinary manipulation as described, the temperature and quantity of fire can be changed as easily as a gas jet can be turned on or off. The response is instantaneous. This particular feature renders the use of pulverized fuel particularly suitable for metallurgical furnaces. Powdered coal is used in all kinds of steel and iron working, including ore-roasting and flue-dust nodulizing, and in open-hearth furnaces, puddling furnaces, busheling furnaces, heating furnaces and forge furnaces.

The main difficulties in the earlier and experimental stages were caused by: 1, not drying the coal; 2, poor pulverization; 3, the carrying of too high temperatures; 4, the use of passages that were too small, giving the gases too high a velocity.

With a knowledge of how much air must be supplied with a given amount of fuel to produce a desired temperature, and a knowledge of the volume of the gases so produced, it is easy to proportion the ports both of inlet and outlet so that a scouring blowpipe effect may be avoided. The excellent practice already attained is undoubtedly due to the application of such knowledge.

Aside from the advantages from the higher efficiency attainable with this fuel, there are a number of incidental factors which in actual service contribute to the profitableness of its use.

The furnace begins its work almost instantly and with whatever degree of temperature intensity may be desired. There are no periods of lowered temperature due to firing cold fuel. There is no cleansing of fires for puddling or heating, so that operation is practically continuous. . There is some cinder formed in puddling and heating furnaces: this is disposed of in the usual way. Most of the ash passes out of the chimney and floats away lightly. A neutral ash content within reasonable limits does not appreciably affect the fire.

It has been somewhat difficult to obtain from large users exact data concerning the performance of the various furnaces. Perhaps the best evidence of success is the continuance of use and the enlargement of plants now in operation. The following are authentic data: In roasting carbonate ores of high sulphur content, the carbon has been driven off and the sulphur reduced within permissible limits by the use of fuel amounting to less than 7.5 per cent of the weight of the charge. This problem involves the maintenance of a low temperature, about 2100° F., to prevent the agglomeration of the ore fines into masses. The same practice obtains in the roasting and nodulizing of ores and flue dust, where the temperature must be sufficient to permit the ore to form nodules or balls, but must not be so high as to cause it to stick to the walls of the roasting kiln.

In open-hearth practice with pulverized coal, steel is usually made with this fuel at the rate of from 450 to 500 lb. of coal per net ton of product. This is from an average of 45 heats, the fuel and product being carefully weighed. These figures were obtained during a continuous run of six weeks. The furnace was operating beautifully when visited and no mechanical difficulty had been experienced. The melts were obtained in slightly less time than with oil.

In puddling furnaces, the fuel supply varies with the season, the cool weather of spring and fall permitting a larger putput than when intensely hot weather affects the men at the furnace. It is safe to say that iron can be puddled at an average expense of 1200 lb. of powdered coal per gross ton of muck bar produced; in fact, less than 1000 lb. of coal per gross ton of bars has been shown in practice during periods when favorable temperatures and continuity of work conduced to high economy.

In heating furnaces and busheling furnaces there is some latitude of performance, due to variation in charges placed in the furnaces and in the sizes of mills served by them. The average consumption of powdered coal in heating furnaces seems to be from 500 to 550 lb. of fuel per gross ton. The busheling furnaces require from 550 to 600 lb. To obtain such results, however, the furnaces must be properly proportioned and equipped and in good condition. It must not be expected that the results obtained by simply squirting coal of greater or less degree of pulverization into a furnace, with an unmeasured jet of air, will equal the practice here shown. Success implies dry coal, fine pulverization and proper air supply. Another factor is that the attendants should be interested in the production of good results. Men of good order of intelligence, operating mechanisms which displace the shoveler and the wheelbarrow man, and who are constantly on the " firing line " both practically and metaphorically, are extremely valuable.

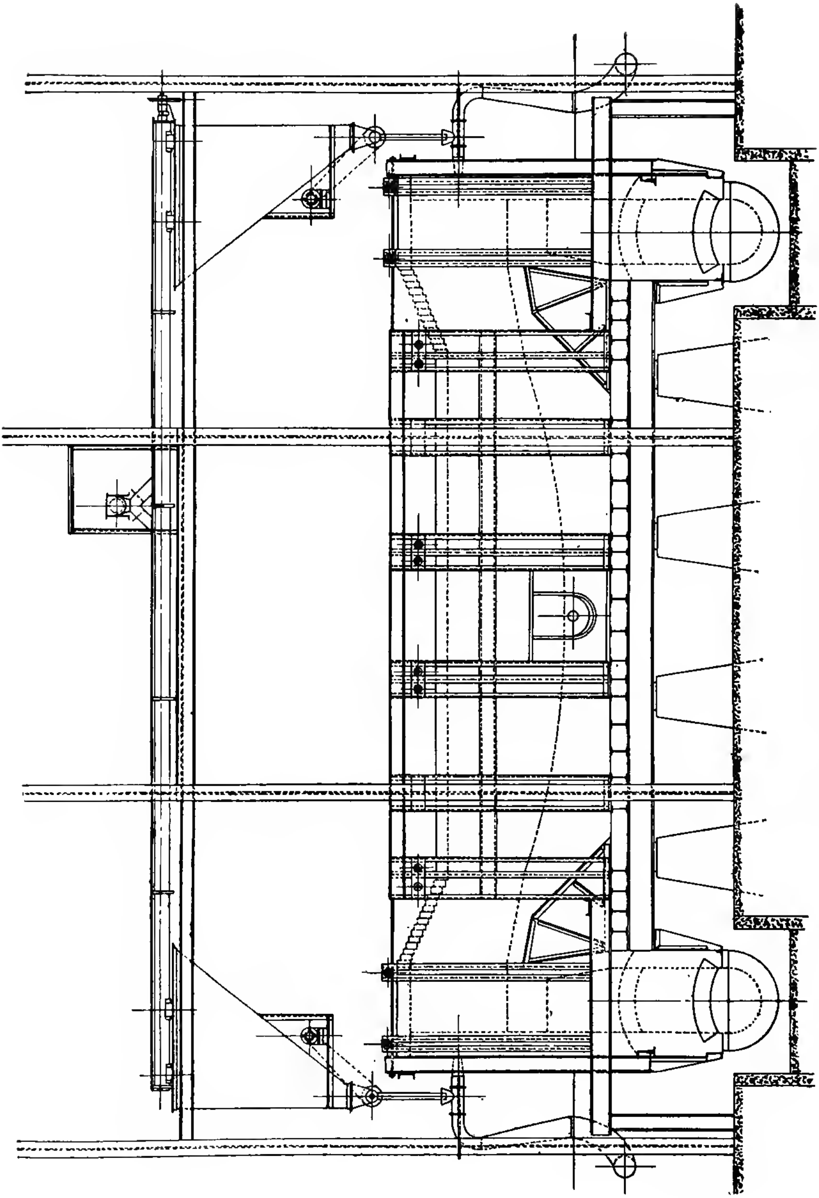

Fig. 30.—Open Hearth Furnace for Powdered Coal.

The operations, however, are simple and the manipulations few and rational in their nature. With such men further advances in economy may surely by looked for.

The procedure followed in the proper preparation of powdered coal as well as in delivering it into the furnace, is as follows (see Chapter III):

The coal is received in the pit of an elevator, into which it is dumped from the cars. The elevator carries it to the hopper of a pair of crushing rolls. After passing through these rolls the coal may be weighed by automatic recording scales and is sometimes caused to pass over a magnetic separator. The coal is next introduced into a drier to expel the moisture. A good drier of approved design will remove 6 lb. of moisture per pound of fuel used in firing the drier and the product will ordinarily carry less than 1 per cent of moisture. From the pit into which the dried coal falls from the drier, it is elevated to bins above, from which it is evenly fed by spouts and feeders to the pulverizing mills. These mills, if of proper construction, grind the coal rapidly to the degrees of fineness required.

The pulverized coal is led to the pit of an elevator, which carries it aloft to a conveyor which distributes it to the coal bins, from which it is delivered by gravity to pipes leading to the burners.

The bins for holding the coal are proportioned to carry sufficient fuel to serve the furnace during intervals in which the mills may not run; as for instance, coal may be ground and stored for twenty-four hours continuous service by running the mills for ten hours.

The coal is fed from the bottom of the bin by a worm feed-screw provided with a variable-speed drive, so that the furnace may receive fuel as desired. The coal falls freely from the feed-screw delivery through a closed pipe, mixing with the air in its descent in preparation for entering the burner pipe.

The burner pipe is so formed that the air passing through it from a fan not only projects the fuel into the furnace,

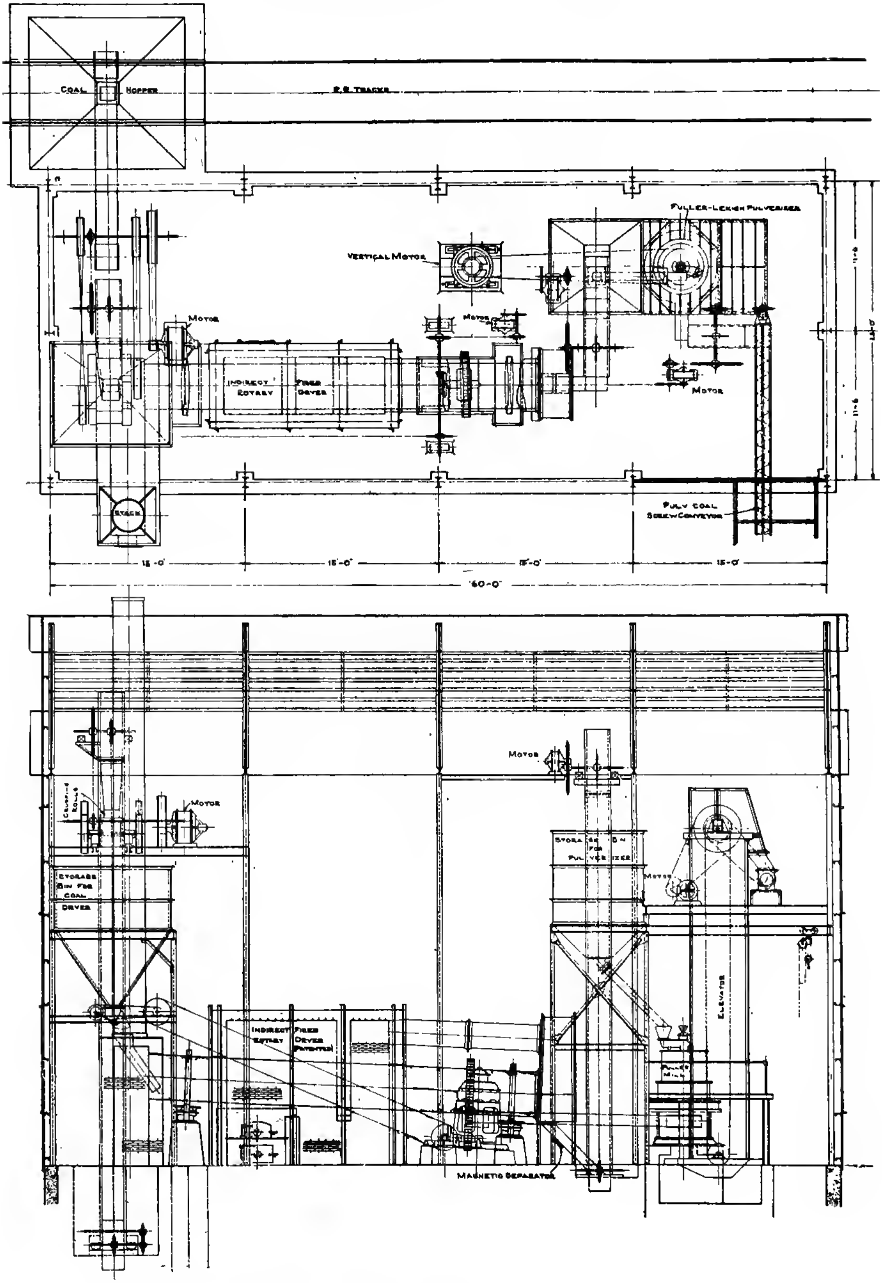

Figs. 31 and 32.—Fuller Pulverized Coal Plant.

but also, while doing this, acts as an injector, drawing with it the descending column of air containing the entrained coal from the bins above. The fuel is therefore completely mixed with the ultimate column of air while entering the furnace. The speed and volume necessary for proper furnace performance are predetermined from known data.

The air is controlled by the fan speed or by gates, or by both, and the coal by the number of revolutions of the feed screw per minute. The operator adjusts these factors to the quantity and intensity of fire desired, and by inspection at times sees that the conditions remain as required. The construction of the furnace is not materially changed when powdered coal replaces oil or gas. The operating cost in the furnace room is very low, as one man can oversee a number of furnaces. The furnaces are so varied in construction and operation that it would not be possible to describe all of them (see Chapter IV). It may suffice to state that any solid fuel which can be dried and pulverized will reach its highest efficiency in that form, and for this reason fuels hitherto deemed unavailable, such as coke breeze, lignite culm, and anthracite culm, may be now looked to for a cheap source of heat.

In actual practice in the use of powdered coal, the ease with which it is burned has been to a certain extent a drawback rather than an advantage. The novelty of the method is so attractive that those experimenting with it are at first satisfied with producing a good fire with simple apparatus in which may exist no such means of control as are necessary for realization of the highest economy.

It is no success to use twice as much fuel as the work may require, nor is it a success to drive a small fire to a destructive intensity in order to offset defective proportioning in design. Correct proportioning involves knowledge of the heat requirements of the job. The amount of fuel necessary may be ascertained and the volume and velocity of the air supply computed. With this comes necessarily a prescription of the volume of the furnace, so that combustion may have time for its completion. The proper size of ports taking off the gases, the size of the chimney, and the velocities of the gases, should all be as carefully determined for powdered

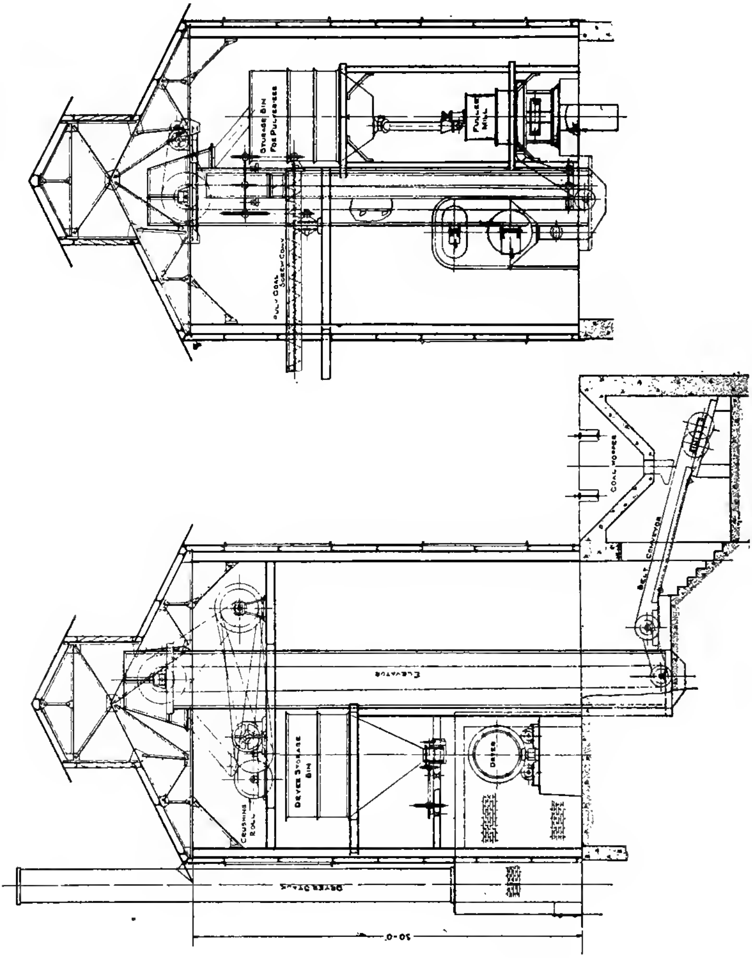

FIG. 33.—Fuller Pulverized Coal Plant.

coal as for gas or oil. A simple experiment based on one set of conditions should not be regarded as conclusive.

With proper proportioning of the apparatus, the operation will be elastic and adjustable to a wide range of performance under a very nearly constant percentage of efficiency. This is unattainable in an installation not proportioned for high efficiency. The ease with which powdered coal is burned is no assurance that the best results are being obtained.

METALLURGICAL FURNACES AT THE GENERAL ELECTRIC COMPANY'S WORKS

The General Electric Company has had a powdered coal plant at its Schenectady works for the past five years, which has been visited a number of times by the author. The information given below was obtained from Mr. A. S. Mann, who had charge of the powdered coal installation, the success of which was due entirely to his untiring efforts. A résumé of Mr. Mann's conclusions appeared in the General Electric Review, and some of the following material is quoted therefrom.

A burner which was perfected by Mr. Mann is shown in Fig. 34 to 36 inc. This consists of a cast-iron cylindrical box, 8 in. in diameter, with five openings beside its discharge mouth. Either of the openings *S* or *T* is used for coal and its primary air, or " carrying " air (40 to 60 cu.ft. per pound of coal dust). Either of the openings *X* or *Y* is used for the combustion air; and sometimes air is admitted at the end, at *U*, also. The first four of these openings are tangential, causing the air currents to take irregular spiral forms, and they are used for short-burning flames.

For an ordinary forge furnace, say 5 by 4 ft., *S*, *Y*, and *U* will be piped up. A fire is started by using combustion air through *Y* alone, for through its use a short complete mixture can be dropped right upon burning kindling. As long as this arrangement is preserved the high heat will be near the tuyere, perhaps 12 in. in front of it. It sometimes happens that with short work it is not necessary that a furnace be hot all over and fuel will be saved if there be a high local temperature only. If a complete and uniform heat is wanted additional combustion air is admitted at *U*;

and there is then an immediate change in the character of the fire. The flame is no longer local; the mixture with air is not as good, and burning calls for more time. Coal that can find adequate air near the tuyere burns there; other coal waits till it finds air, and there is a long flame in consequence. By manipulating the air valves at *Y* and *U*, the

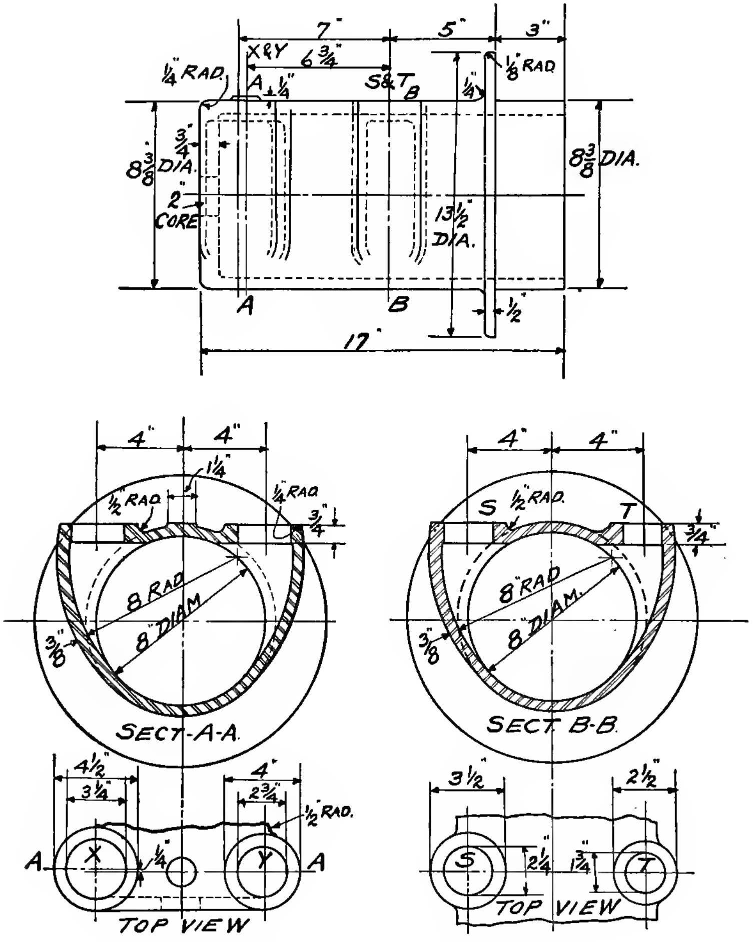

FIGS. 34, 35 and 36.—Mann Burner.

range of regulation is great and it is possible to make a very long flame; even as much as 30 ft. long under certain conditions. The same thing is true of an oil fire. If mixtures are very poor and oil is sent from the burner in slugs, a flame of great length is attainable; it is only requisite, for a long flame, that the fuel and air travel in parallel streams, whatever the nature of the suspended fuel. Such long flames are not economical; good mixtures give good economy. It must be remembered that the velocity of the stream passing along the axis of the burner should not be so low as to drop the coal. The burner must therefore not be too large, if a short fire is wanted. When two air streams (as at S and Y), rotating in counter directions, meet, rotation becomes nil and the axial speed must be enough to keep the coal in suspension and preserve the mixture already made. It will be noted that the rotary motion within this burner is just the motion used in a centrifugal separator to draw moisture out of steam, or in a dust collector to separate air from solids. In these devices either the body diameter is large enough to keep the two elements apart, or baffles are provided to trip the heavy material. Moreover, there are separate and guarded outlets for the two components in such devices; none of which is used in this burner. That the device does produce a mixture is shown in its operation; for even when the openings S and Y are used, causing both jets of air to swirl in the same direction, the flame is only about 24 in. long. As the combustion air at X is reduced and the air at U is increased, the flame length is increased and combustion becomes slower, showing a less perfect mixture. Some of the furnaces are piped in just that way; and though the range is not great it is ample for most forging work.

For a feeder, the General Electric Co. has found that a simple screw will answer every purpose. The feeder draws coal from a supply tank and delivers it in definite amounts to a cavity from which it can be picked up by the primary air, which carries the fuel along with it. In this plant the feeder is driven by a small motor which can turn at 1800 r.p.m., 800 r.p.m. or any intermediate speed. It is geared down only once. The screw will feed at 300 or 600 turns a minute, or at an even higher speed if required. With so wide a speed control it is possible to carry a fire that shows just a visible red; by a simple movement of a rheostat handle the same fire will spring up vigorously and shortly give heat enough for any forge work.

There is a feature of the plain screw-feed that makes it very convenient in many situations, viz.: it can stand a little back pressure; so that the discharge distances may be long.

In this installation the coal is fed across the shop underground; the supply tank with its feeders and motors is above ground. The coal is carried 90 ft. or more, then up to a furnace and its burner. The distance could be greater, even several hundred feet, and the control would be just as convenient and exact, because the switch and rheostat are located at the side of the furnace and the operator has no occasion to come over to the supply tank. In all of these long transmissions there will be a little back pressure at the screw. Primary air is introduced on the eductive principle, using the fitting shown in Fig. 37. The resistances on the discharge side increase with the distance. If the distance is short, there is a negative pressure in the pipe leading from the screw to the opening *A* (see Fig. 38). Eight inches of vacuum, by water column, is easily attainable. As the discharge distance increases, with the addition of elbows and crooks, this vacuum falls; it may totally disappear, and there may exist as much as 4 or 5 in. of pressure. A plain screw is little affected by these changes, for the throat fit at *A*, Fig. 38, is machined so that a certain impetus is given to the coal. The long distance transmission has been so proportioned, however, that the static pressure is usually negative, say 1 in. or so of vacuum.

The feeder box and the screw are shown in Fig. 39 and Fig. 40 respectively. While usually only a small amount of power is needed to turn the screw (it can be turned with

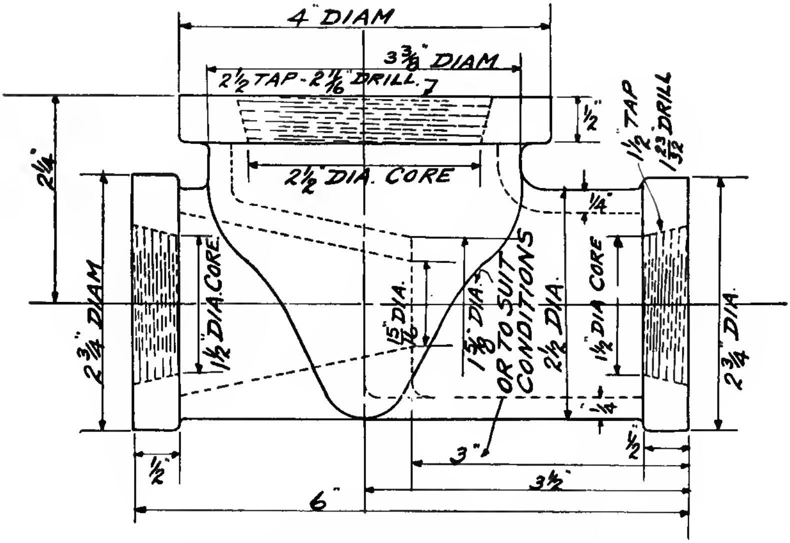

Fig. 37.—Fitting for Introducing Primary Air

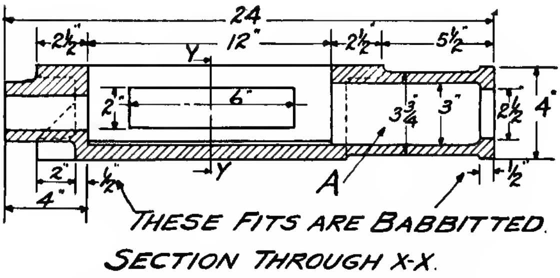

Fig. 38.—Feeder Box—Longitudinal Section.

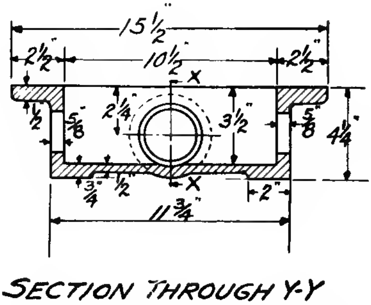

Fig. 39.—Feeder Box—Cross Section.

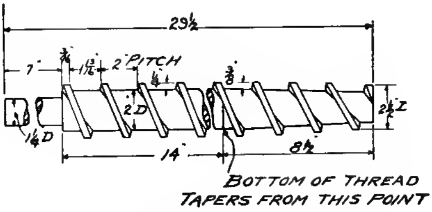

Fig. 40.—Feeder Box Screw.

the finger fast enough to carry a moderate fire) there are times when a considerable amount of power is required. Normally the coal is light and fluffy, but under certain conditions (as after long standing) coal packs so tightly that no mechanical device can move it. The screw is cut in a lathe with spaces proportioned to the quantity required. A 2½-in. diameter screw, as shown, will feed 700 lb. per hour, and with slight modifications much more. The bottom of the thread is tapered so that, after the screw has "taken its bite," the volume increases as the threadful advances, and the flow to the pipe is free and easy in consequence. The weight of a cubic foot of powdered coal may be anything from 29 lb. to 50 lb. When delivered by a conveyor screw to a tank 7 ft. deep and then measured immediately, it weighs 31½ lb. per cubic foot. In twenty-four hours it will reach 35 lb. and it then increases in density until within six weeks (without jarring) it will weigh 38½ lb. These changes will take place in a container with smooth sides with a diameter equal to half its depth. In a piece of 6-in. vertical pipe 10 ft. 6 in. long, it was found that there was little settlement even after two months. The weight of coal in the tanks is computed at 35 lb. per cubic foot. Sometimes the coal flows as freely as a liquid and will spread out so that its top surface is nearly level in the tank. At other times it will not even flow down hill, though it always moves freely enough unless it has been stopped for forty-eight hours or longer.

This tendency to pack and clog is due to the physical arrangement of the particles through settlement rather than to moisture. Powdered coal will absorb microscopic particles of water, but it cannot be made wet by throwing water upon it. It is impossible to make a paste by using sticks to stir the coal into water. The only way to make a mixture is to take a little coal and water between the finger and thumb and knead the two together. In a day or so this water evaporates, leaving the coal clean and dry.

It is not difficult to dry the coal to ½ of 1 per cent of moisture or less, but there is always some small portion that contains moisture in excess. It is surprising to find an 8-ton bin of coal that has been nicely dried dripping with water twelve hours afterwards; but it does so, and it is not an uncommon thing to find a pulverizer frozen up with water in the morning. The source of such water is not hard to find. When coal is in a dryer it is hot and so is the contained air. The air is saturated with moisture at the temperature of the dryer and when the coal and air cool the moisture is precipitated, and in cold weather makes its presence felt. It thus appears that coal cannot be made thoroughly dry through the agency of high temperature.

It is often asked whether an oil furnace can be successfully changed over to use powdered coal. This has been done at the General Electric Company works in the following manner: a coal furnace needs one or sometimes two burners. depending upon the size and kind of work that it is doing. An oil fire make no visible smoke and there is little or no odor from its products of combustion, so there is no reason why there should be a chimney or (in many cases) even a furnace vent. Flames and hot gases can be brought up to, and passed out of, the door, keeping the fronts hot. A coal fire yields no black or colored smoke, though the gases contain some small particles of white ash; but it does have a decided and disagreeable odor. It is better then to provide a hood over the furnace door; enveloping it, if heat is wanted right at the door as it is in most forge work; and this hood must have an outdoor vent. If all gases are allowed to escape in this way, the heat distribution is not perfect, and therefore it is best to use a chimney vent at an appropriate point. It is good practice to run this chimney up through the roof over each furnace and to cut into it a 45° Y to which the hood vent is attached. An upward draft is induced in the hood vent by the chimney draft. Figs. 41 and 42 are views of such connections. It pays to provide a nicely fitted damper which can be adjusted with precision; if the damper works on a screw thread the

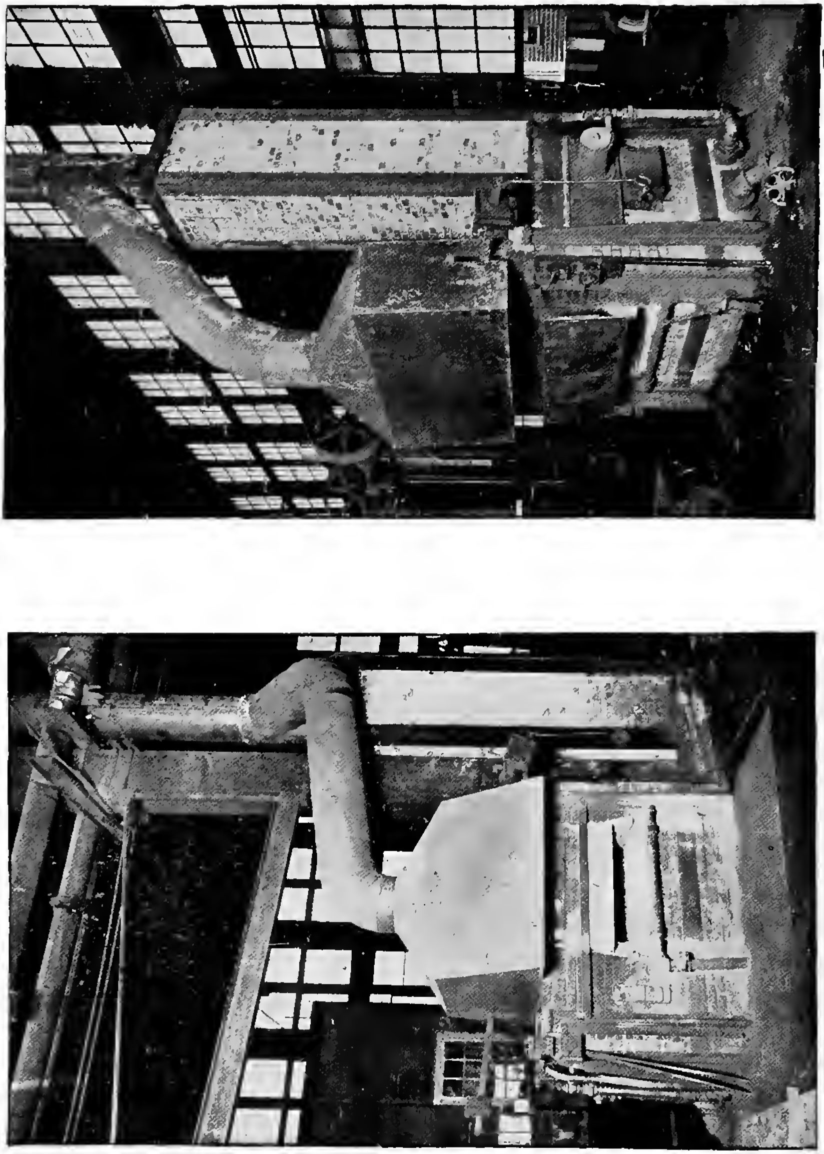

Figs. 41 and 42.—General Electric Co. Powdered Coal Furnace.

tips can be moved $\frac{1}{50}$ in., though such extremely fine adjustment is not usually needed. It also pays to preheat the combustion air. The saving in fuel greatly exceeds that represented by the heat imparted to this air. It was found

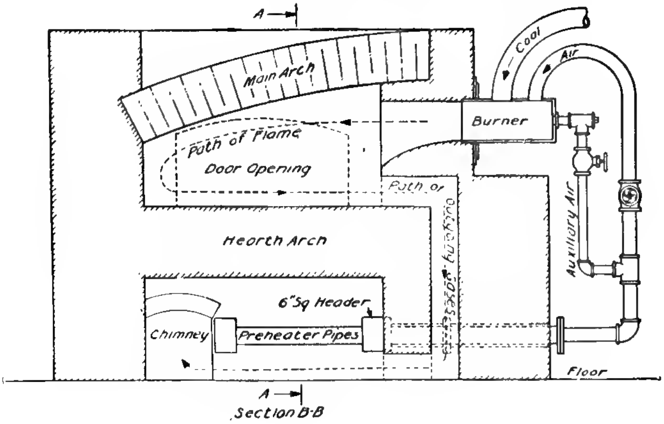

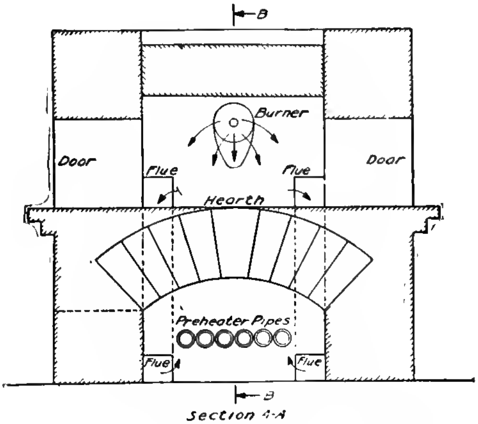

Figs. 43 and 44.—General Electric Co. Powdered Coal Furnace.

that a saving of 35 per cent was secured in one case with air preheated to 334° C., while the heat added to the combustion air was only 16 per cent of that in the coal. Only a moderate air temperature was used, as it is preferable to install only such surface as can be readily cleaned, and the low temperature prevents the burning-out of the preheating surface. It is good practice to allow 15 sq.ft. of surface in a furnace that burns 100 lb. of coal per hour, with an inside temperature of 1355° C.

The preheater is made of 3-in. cast iron soil pipe, six lengths being rusted into a header at either end, and placed beneath the hearth in the path of the waste gases.

Two vertical sections of a furnace which is used in the General Electric works are shown in Figs. 43 and 44. The hearth is 43 in. long and 24 in. deep, though this same design is used for furnaces having twice the area.

Furnace Lining. An important part of the subject of furnace construction, which must not be overlooked, is the durability of the furnace. In the metallurgical arts, when extreme heat is a feature of the operation, care must be taken to avoid destroying the furnace by its own operation. This is not difficult. Much of the trouble has arisen from the gases impinging upon the furnace walls at points where changes of direction of gas travel are necessary, and from too high a velocity of gases, due to contracted areas for passage.

Powdered coal is destructive because of concentrated heat of blowpipe tendency, wearing effect due to the impinging of the coal, and the tendency of the ash and brick to flux together. These objections are partially overcome by the use of low air pressure, introducing the coal at a very low velocity, spreading the flame over as large an area as possible, and the cooling of brickwork by water circulation. Where the fuel blows against a bridge wall, the latter requires frequent repair. There has been a gradual reduction of air pressures from 20 lb. on the cement furnaces of early days down to as low as ½ oz. on metallurgical furnaces. This drop in pressure has been due to an effort to avoid the destructive effect of the heavy blast of powder against the brickwork. Where low pressure is used, it must be applied close to the furnace, for 4 oz. of pressure is necessary to carry the fuel through even a short length of pipe.

If the utilized heat is largely absorbed from the gases by the charge, the waste gases will be proportionately less active in scouring the brickwork. In almost any construction (except perhaps a rotary cement kiln) it is found necessary to change the direction of the gases in their progress toward the flue. This change of direction causes the gases to impinge upon the diverting bricks with an energy proportional to their velocity. The brick can be fully protected at these points by a system of water-cooled pipes imbedded in the walls. The brick may fret away somewhat until the area of protection is reached, after which further progress is arrested.

The surprisingly small amount of water which it has been found necessary to introduce, while maintaining the outlet below 200° F., proves that the cooling effect is limited to a prevention of cumulative action and is not perceptably a drawback upon efficiency. Of course, the piping must be so arranged that no air or steam pockets shall exist and so that the circulation will be proportional to the heat stimulus.

At the General Electric works, furnace linings have occasionally been burned out by powdered coal fires. Sometimes a wall looks like the rocks in a turbulent stream after ages of wearing. The brick has been cut away in a few weeks. Coal may be destructive in its action, but it need not be. A hot stream of coal and air driven at high speed against a wall will cut it out. A low-fusing point brick is melted down; a refractory brick is cut away mechanically. It is possible to cut away carborundum brick by misdirecting a fire which did not even approach in temperature the melting temperature of the brick. But such action is unnecessary. Except at the burning tuyere, brick need not meet a destructive flame, and the tuyere itself can be so shaped that repairs will be minor and infrequent. The remedy for melting down is to avoid high velocity along the brickwork. If a wall must take the full force of a current, it is best to protect it with loose brick or to pass a current of combustion air along its face, which both deflects and protects. An arch can always be treated in this way. Some of the combustion air is cut off from a burner and sent along on top and over it. The total volume of air used is not increased and a reducing fire can still be carried; the heat distribution is noticeably good.

An interesting problem in furnace construction presented itself in a case where it was desired to heat certain metals very slowly and uniformly; the furnace to be charged when cold, that is at room temperature, and brought up to 900° C. in six hours, the rate of temperature rise not to exceed 200° C. per hour at any part of this time. After reaching 900° C. the heat was to be held for the rest of the day. Perhaps this can be done with other fuels; it was very easily done with powdered coal, and there would have been no trouble in holding to a temperature increase of 20° per hour had it been required. This was true of the first hour too, which, by the way, presents the greatest difficulty.

It may be of interest to note the result of trials upon furnaces built to heat metals for forging purposes. There is no standard of comparison as there is in the case of a boiler trial, so one had to be devised. There were eleven billets, 4 in. square and about 20 in. long, weighing approximately 91 lb. each, which were to be melted down for scrap. The two furnaces selected could each heat one-half of them at a charge, five at one time and six at the next, so the hearth was covered over 50 per cent of its area and 4 in. deep. As soon as six of these billets were heated to a smart forging temperature, just short of dripping, they were hauled out and the five cold ones put in. The hot billets were dropped in a tank of cold water and kept until they were stone cold. In this way, these charges were heated alternately all day Fuel was weighed, furnace temperatures were measured, and in order to allow for the metal burned away it was weighed, at the beginning and close of the trial, to give an average. The procedure in boiler testing was followed as

Ingot Heating Furnace Using Holbeck's System of Pulverized Coal.

closely as possible, with these two differences—the furnaces were cold when started and not all the metal was heated that could have been heated. If each charge had been twice as great, the output per pound of fuel and the working efficiency would have been nearly twice as large; for only about 10 per cent of the fuel in the furnace goes toward heating the charge; one quarter of the rest goes to heat up the brickwork, and the balance goes up the chimney.

The table below gives the results of these trials. The first was upon furnace No. 4 with cold combustion air and coal dust for fuel; the second upon No. 0 furnace with hot air and coal dust; the third was with oil on No. 0 furnace.

RESULTS OF FORGE FURNACE TRIALS

	No. 4 Furnace.	No. 0 Furnace.	No. 0 Furnace.
Kind of Coal	Coal.	Coal.	Oil.
Duration of trial	60 hr.	60 hr.	60 hr.
Temperature of furnace at start	cold	cold	cold
Temperature of furnace at finish	1370° C.	1365° C.	1350° C.
Average furnace temperature	1300° C.	1301° C.	1270° C.
Time per heat, including warming up	94 min.	85 min.	98 min.
Number of heats	8	10	9
Average time of heat, neglecting first	51 min.	41 min.	44 min.
Temperature of combustion air	16° C.	334° C.	240° C.
B.t.u. per pound fuel	14,000	14,000	19,400
Total fuel, including kindling	1042 lb.	790 lb.	518 lb.
Total steel heated	4288 lb.	5015 lb.	4563 lb.
Hourly Quantities:			
Pounds of steel per hour	573	659	604
Pounds of fuel per hour	139	104	69.5
Economic results:			
Pounds of steel per pound of fuel	4.11	6.35	8.83
B.t.u. in fuel per pound of steel	3406	2203	2196

No. 4 furnace is somewhat larger in area than No. 0. The first and second trials may be compared to show the effect of preheating the air; the second and third to show the relative merits of coal and oil.

The temperature of the heated air was apparently higher in the case of the coal than in that of oil; but all of the air was preheated for oil; while primary air, or say 25 per cent of the total air, for coal, was not heated at all. In any event the same air heater and the same furnace were used in the two cases.

The heats in this class of work are unquestionably better with coal. They are noticeably brighter and softer; to express the difference as a forge smith would, coal heat is more penetrating, and in a given furnace more work can be done, and more fuel can be well burned, with coal than with oil. Columns No. 2 and 3 of the table show a 10-per cent greater output with coal than with oil. It may be noted, however, that efficiencies are virtually the same. The same thing is true in comparing coke with oil in a large oven, and in general it may be stated that efficiencies will be equal if the fuels are properly burned, and this will cover coal upon a grate too. If burning conditions are right, if fires are carefully and intelligently watched, efficiencies will be high and will be essentially equal. When fires are not understood, when conditions are wrong and results are poor, there is no use in trying to draw conclusions from a trial. The speeds of two race horses cannot be gauged by a trial when they are both half starved. If a fire beneath a boiler cannot turn 75 per cent of itself into steam—show 75 per cent efficiency—either the operator is untrained or the burning arrangements are wrong. A skillful man will obtain better than 75 per cent.

The powdered coal furnace has no ups or downs. There is no thick fire or thin fire, fresh coal or old coal to insure fluctuations. The furnace can always be kept at its best working point, and if so kept it will be heated evenly all over. Of course, a large charge of metal to be heated will by its very volume absorb heat rapidly, causing a fall in waste gas temperature and possibly a little smoke, at first. This is in the nature of things, but conditions quickly bring the charge to a point where the chill is not sufficient to affect combustion. High temperatures then come again and smoke disappears. If the rate of work to be done is constant, there is no reason why high efficiency may not be uniformly maintained by proper construction and operation. The subject has been mastered to a point beyond the experimental stage. High efficiency may be confidently relied upon. The quality of the coal is not of supreme importance. Indeed, in the developments of the future the chief attraction of powdered coal may lie in high efficiencies obtainable from low-class or refractory fuels hitherto thought unavailable.

AMERICAN LOCOMOTIVE CO. PLANT

At the works of the American Locomotive Company at Schenectady, N. Y., there has been installed one of the powdered coal plants of the Quigley Furnace and Foundry Co. of Springfield, Mass. This has been visited a number of times by the author. This plant works very satisfactorily with a distinct saving in fuel charges. The plant formerly used a fuel-oil system for heating the blanks for drop-forgings and for general small forging work.

This plant was built and started in May, 1913, and while there has been the usual amount of trouble to be expected in starting up new equipment, the system is at the present time giving good results.

The coal milling and distributing plant is motor-driven and centrally located in a building of non-combustible construction. At present it has a capacity of 5 tons per hour, and it is so arranged that by duplicating the dryer and pulverizer its capacity can be doubled. The plant has a concrete hopper placed under an elevated track where it can be served with coal either by discharging directly into it from the car or from the stock pile by means of a traveling crane and grab bucket. The concrete hopper discharges into a rotary crusher capable of crushing 20 tons per hour of run-of-mine coal to $\frac{3}{4}$-in. cubes, from which the coal is carried by means of a bucket elevator to a storage bin which

Plate-heating Furnace Arrangements.

discharges through chutes and a reciprocating feeder into an indirect dryer of 6 tons capacity per hour. From here it is elevated to a dried-coal storage bin arranged to feed by chutes directly into the pulverizer, then elevated to a pulverized-coal storage bin, from which it is distributed by means of screw conveyors to the various furnaces in the drop-forge shop. The plans permit of further extension to the blacksmith shop and other departments later.

The milling building is detached, well ventilated, and well built in conformity with underwriters' requirements, and has been accepted by them as on a par with buildings containing equipment for fuel oil or gas for industrial purposes. There has been no trouble whatever from spontaneous combustion, or from fires from other causes, and there appears to be no reason to expect trouble from this source if ordinary precautions are used, as required with any other kind of fuel.

The feed device used at the American Locomotive shops has a motor-driven controller and consists mainly of two screws, the upper located so as to propel the powdered coal from the bin forward to a point where it falls, in a stream, past an opening through which a cross current of air at low pressure (a small portion of the total amount of the air required for combustion) is directed, so as to force the desired quantity of coal to the burner through suitable pipes. The lower or return screw is of greater pitch than the upper and returns any excess of coal to the base of the hopper. By this method a continuous stream of coal passes the opening and any portion up to the capacity of the upper screw may be utilized by increasing or decreasing the force of the cross jet of air. As the lower screw has a greater capacity than the upper it is impossible to clog the device even when the consumption of coal is altogether stopped.

The oil was measured as follows: There were two tanks with gauge glasses, so that the exact level of oil could be determined: the tanks were so connected that one could be filled with oil while the other supplied oil to the furnaces.

TESTS AT AMERICAN LOCOMOTIVE COMPANY WORKS

Test on Oil Furnace.

Nov. 14, 1913. Test started 6:10 A.M.—ran to 3:35 P.M.

Furnace ran 11 heats, 12 pieces to each heat: pedestal die wedges.

Heats.	Time, Minutes.	Forging Time, Minutes.	Pieces.
1	31	18	12
2	25	18	12
3	20	16	12
4	21	19	12
5	23	18	12
6	21	17	12
7	40	22	12
8	28	16	12
9	21	16	12
10	23	17	12
11	31	16	12

Total actual time, 9 hours, 25 minutes.

Oil used, 1238 gallons.

Blast on oil burner, 6½ ounces from 6-in. pipe, reduced to 4 in. at burner.

Motor, 120 horse-power, runs three No. 10 Sturtevant blowers for blast.

Each blast consumed 1½ horse-power.

COMPARISON OF POWDERED COAL FURNACE AND OIL FURNACE

(Both same size)

	Powdered Coal Furnace.	Fuel Oil Furnace.
Time run	10 hr. 22 min.	9 hr. 25 min.
Fuel consumed	2177 lb. coal	138 gal. oil
Average time per heat	25.1 min.	25.8 min.
Average time per forging	1.87 min.	1.47 min.
Actual forgings	122	132
Forgings to be counted	132	132
Cost of fuel at contract price	$2.82 ($2.56 per ton)	$6.69 (4.8c. per gal.)
Cost of fuel delivered to the furnace	$3.31	$6.89

The tanks were accurately calibrated and the oil consumption computed accordingly.

The powdered coal furnace ran fifty-seven minutes longer than the oil furnace. However, thirty minutes were lost because of failure to charge the furnace on November 12 and eighteen minutes were lost on November 13, because the plate for heating the dies was not put in at the proper time. The work was on pedestal die wedges, which are of iron. The blocks weigh 25 lb. and the forgings 16 lb. The time lost on the powdered coal furnace would have been more than sufficient for making ten additional forgings, so that the amounts turned out by the furnaces should be considered equal, as indicated in the table above.

Some weight should be given the fact that the oil costs were probably kept at a minimum, as the operator was thoroughly familiar with oil and was able to obtain the maximum heat with the minimum amount of fuel. The same men ran the two furnaces and the only variable factor of importance was that the ram used on the hammer at the oil furnace was about 500 lb. heavier than the ram on the hammer at the coal furnace. This did not affect the time of heats, but allowed a quicker forging time and there was therefore less time lost with nothing in the furnace, when using oil.

AMERICAN IRON AND STEEL PLANTS

The Lebanon plant is described by Mr. James Lord in the Western Engineer's Society Proceedings. About 1903, the American Iron and Steel Company, noting the use of powdered coal in large furnaces in the cement industry, commenced the experimental use of this fuel in metallurgical furnaces.

From the first it was apparent that economical use depended upon absolute control of the feed by the burner. This having been accomplished, the fuel has been applied to over one hundred furnaces of various types, such as those for puddling and heating, and of smaller sizes for reheating nut, bolt and spike bars.

Continuous Billet Heating Furnace using Holbeck System.

It has proved to be a commercial success for all of the above purposes and can probably be used with equal economy for basic open-hearth steel furnaces, either with or without checker work. Experience in the use of this fuel over a number of years has been so satisfactory and so economical that the company is now largely increasing its installation, and is about to apply it to open-hearth furnaces.

They have found that success in using powdered coal for metallurgical furnaces requires:

1. That both the free and combined moisture be expelled by artificial heat, down to about 0.5 per cent.
2. That the coal be pulverized so that 95 per cent will pass through a 100-mesh sieve, and over 80 per cent will pass through a 200-mesh sieve.
3. That delivery to the furnace be controlled by the burner so that the proper feed may be secured. The capacities of burners used at Lebanon range from 40 lb. per hour to 900 lb.

In the puddling and heating furnaces, the firing grates formerly used for lump coal serve as combustion chambers for the powdered coal, and collect a large portion of the ash. The combustion chambers in the heating furnaces hold about 6 tons of iron piles, and are about 5 ft. from back to bridge wall. Some ash is collected at the base of the stack, and some, of impalpable fineness, passes through the stack. That which falls upon the material in the furnace is too small a percentage to affect it unfavorably. In one of the plants, located near a residential section, suction fans have been installed to collect the ash.

The equipment for preparation of the powdered coal at the Lebanon plant is as follows:

The slack coal is conveyed automatically from the car to the pile, then taken by screw conveyors to the dryers, and in the same manner from the dryers to the pulverizers. When ready for use it is similarly conveyed throughout the works, in some cases as much as a third of a mile. It is not touched by hand or shovel from the freight car to the furnace.

Using slack coal, a crusher is unnecessary. Various types of dryers are used. The pulverizers are of two types, the horizontal tube mill, and the upright grinding mill. They are practically equal in efficiency, each machine delivering 4 to $4\frac{1}{2}$ tons per hour. Both of these types of mill are made by a number of manufacturers.

As the coal leaves the pulverizing plant it is weighed on a large automatic scale. The heating and puddling furnaces have each a small automatic scale, and the total of the small scales is checked up each day with the large scale.

At the end of each line there should be an overflow pipe to prevent the coal from choking up the screw, if anything should happen to the cross lines. Otherwise, should the coal overflow near an open fire, it will at once ignite.

Attached to each of the furnaces is a tank or hopper, of size to carry about a fifteen-hours' supply of powdered coal. On several occasions the fuel has ignited in these tanks, usually on Monday mornings when the left-over coal had accumulated moisture. In such cases, it is only necessary to stop the supply and feed the burning coal into the furnace until the tank is empty. There is no danger of an explosion under these conditions. Indeed, during the entire experience at the Lebanon works with this fuel there have been no explosions. These occur from coal in suspension in a room in contact with flame. The same result would follow filling a room with wheat flour in suspension. Proper attention to the pulverizing plant and machinery will eliminate this possible danger.

The fuel should be delivered to the puddling and heating furnaces at a low air pressure. This plant employs 4 to 6 oz. of blast to blow the coal through a small pipe from the burner inlet to the large blast pipe, which in a heating furnace is from 10 to 14 in. in diameter. This large pipe conveys the coal to the furnace at a pressure of 1 oz. or less per square inch. If these pressures are adhered to, the roof and side walls of a furnace heating wrought iron for the rolling mill will last four or five months when running double-turn, six days per week.

As to the economy of the fuel, actual results in the Central works during the months of April and May, 1913, are as follows:

Puddling Furnaces. The following figures show the quantity of fuel consumed to produce a ton of puddled bar, made from gray forge pig iron. (The product during these months was high-grade bar requiring special work and time.)

	April, Lb.	May, Lb.
No. 23 furnace	1362	1318
No. 24 furnace	1109	1277
No. 25 furnace	1271	1472
No. 26 furnace	1371	1362

The average during the same months on a lower grade of pig and cast scrap was 1239 lb.

Heating Furnaces. In heating piles for rolling the following results were obtained during the same months:

Name of Mill.	April, Lb.	May, Lb.
12-inch Central	516	528
12-inch West	544	570
16-inch Central	519	533

The figures show the weight of fuel in pounds, consumed to produce a gross ton of rolled bars. On steel billets the amount would be one-third less.

Records for the year 1912 show the cost of preparing pulverized coal to have been as follows:

	Rate of Gross ton of Coal Powdered
Fuel for dryer	$0.034
Repairs to buildings	0.002
Operation	0.145
Power (steam and electric)	0.221
Repairs to machinery and equipment	0.200
Total	$0.602

Rivet Heating Furnaces using Holbeck System.

This total includes the cost of transmission through pipes to the furnaces.

The item of repairs includes expenses which should have been charged over the past eight years, and the total cost of preparation and transmission did not actually exceed 50 cents per ton of powdered coal produced during 1912.

If the cost of transmission is separated from that of actual preparation, the cost of the latter would be less than 40 cents. Many plants would not need the expensive transmission system required at Lebanon.

In general, so many variable quantities enter into the matter of cost that one can hardly set an exact figure. At the same time, it is certainly useless to accept the low figures given by manufacturers of pulverizing machines. We hear much about costs of 10 or 12 cents per ton for grinding, which may be adequate for some part of the process. What the purchaser wishes to know is the total cost of handling the coal from the cars up to the furnace. The very extensive and well-designed plant at Lebanon, from exact figures, counts on 50 cents per ton for unloading, screening, drying, grinding and placing at the furnace. This includes the wages of two men engaged all the time in unloading cars and caring for the distribution of the coal. It also includes the care of the dryer, care of the grinding plants and upkeep of the apparatus. This 50 cents a ton is just about taken care of by the difference between the cost of slack coal and that of run-of-mine coal, the latter of which could be used on ordinary grate fires.

When the coal is prepared as herein outlined, smoke is practically eliminated. If the stack shows black smoke, it proves that there is wasteful use of the fuel, to the detriment of the operator's interest, and this is or should be at once corrected.

Fig. 45 shows the outline of a furnace from which gas samples and furnace temperatures were taken at the three points indicated. Gases were analyzed by an Orsat apparatus and furnace temperatures were taken by a Thwing radiation pyrometer. The first three runs were made under working conditions, heating a pipe pile, and the last three with the furnace empty. The coal used contained 54.86 per cent fixed carbon, 1.85 per cent sulphur, 0.74 per cent moisture, 32.68 per cent volatile matter and 11.72 per cent ash. Its computed heat value was 13,250 B.t.u. per pound. It was ground so that 89.07 per cent passed over a 100-mesh and 70.82 per cent over a 200-mesh screen.

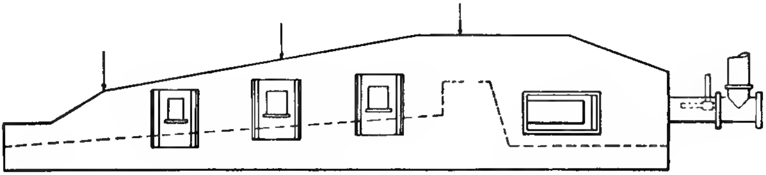

FIG. 45.—Outline of Lebanon Furnace.

Test. No	Date.	Time.	Gas Analysis									Speed of Control Screw R.p.m	Air Blast Pressure		Air Blast Temp. Deg Fahr.
			Bridge.			Center.			Near Neck.				Primary Blast (Oz.)	Secondary Blast (Oz.)	
			CO_2	O	CO	CO_2	O	CO	CO_2	O	CO				
1	10/14/14	11:15 A.M.	11.4	3.6	0	15.0	2.1	0	12.0	2.8	0				
2		2:55 P.M.	11.0	6.0	0	9.0	0.7	0	15.0	1.7	0				
3		4:30 P.M.	13.4	2.6	0	12.0	4.0	0	13.6	4.6	0				
4	10/15/14	4:10 P.M.	13.4	2.8	0	13.0	3.0	0	12.8	3.2	0	54-62	5.625	0.625	428
5		4:50 P.M.	11.4	3.6	0	12.2	2.8	0	9.2	3.2	5	37-42	5.625	0.500	
6		5:25 P.M.	8.6	5.4	0	9.0	4.0	0	9.0	4.6	0	37-42	5.625	0.500	

STACK AND FURNACE CONDITIONS

Test No.	Bridge.			Center.			Near Neck		Temp. Deg. F.
	Smoke from Stack.	Furnace.	Temp. Deg. F.	Smoke from Stack.	Furnace.	Temp. Deg. F.	Smoke from Stack	Furnace.	
1	None	Ready to Draw	2560	Trace	Beginning to Drawing		None	Drawing	
2	None	Drawing	......	None		......	None	Making Bottom	
3	Trace	Ready to Draw	......	None	Ready to Draw	......	None	Drawing	
4	Trace	Empty	2460	None	Empty	2480	None	Empty	2390
5	None	Empty	2420	None	Empty	2460	None	Empty	2370
6	None	Empty	2530	None	Empty	2540	None	Empty	2540

CHAPTER VIII

POWDERED COAL UNDER BOILERS

A PLANT in New Jersey recently visited by the author made a test on crushed coal, ground to a fineness of only about 60 mesh. The coal was fed into a " coal integrator " and conveyed to the boiler furnace, a distance of approximately 100 ft., by air at 4 lb. pressure, through a $1\frac{1}{2}$-in. rubber hose. The test started at 11 A.M. with the furnace empty, the steam gauge then showing 80 lb., and at 11:17 A.M. the gauge was at 123 lb. and the safety valve blew. The amount of coal burned during this time was 470 lb. and the amount of water evaporated about 9.5 barrels of 400 lb. each. Then $(400 \times 9.5) \div 470 = 8.08$ lb. of water were evaporated per pound of coal. During the test the coal was fed through the top of the furnace, while the air for combustion, at 1-oz. pressure, was fed into the furnace from both sides at the rate of 180 cu.ft. of air per pound of coal. The heat was so concentrated and intense that the inside lining of the fire box door was melted. Ash piled up in the furnace, necessitating a shut-down after running about an hour, for cleaning out. The trouble was no doubt due to insufficient grinding.

Reference was made in Chapter IV to the apparatus devised by Whelpley and Storer, for firing a boiler in part with powdered coal. This was experimented with at an early date by Chief Engineer B. F. Isherwood, U.S.N. The boiler was of the horizontal type with two flues, having 299 sq.ft. of heating surface and $13\frac{1}{2}$ sq.ft. of grate. A coal fire was maintained upon the grate and the powdered coal fed in above it, a fire arch being used to maintain the furnace temperature when the powdered coal was used, but not when the grate fire was employed alone.

Figs. 47 to 49 show an arrangement of apparatus for burning powdered coal under a Heine boiler. Most of those engaged in experimental work on powdered coal under boilers have ignored the fact that a combustion chamber for burning powdered coal must be considerably larger than one for burning the same quantity of coal upon a grate. The floor of the combustion chamber in this instance consists of cinders thrown upon a row of water-tubes. There is a wide slot in the middle of this floor, through which the liquid ash may drop into the ash pit, which is water-cooled. The globules of liquid ash take on a skin or shell in falling, which prevents the formation of a lake at the bottom of the ash pit.

The combustion chamber should have

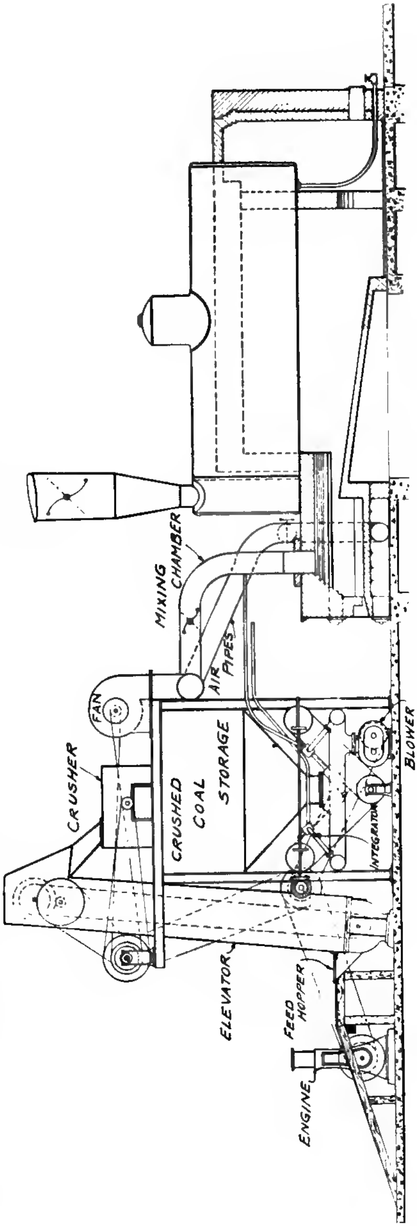

FIG. 46.—Plant Using Coarsely Ground Coal under Steam Boiler.

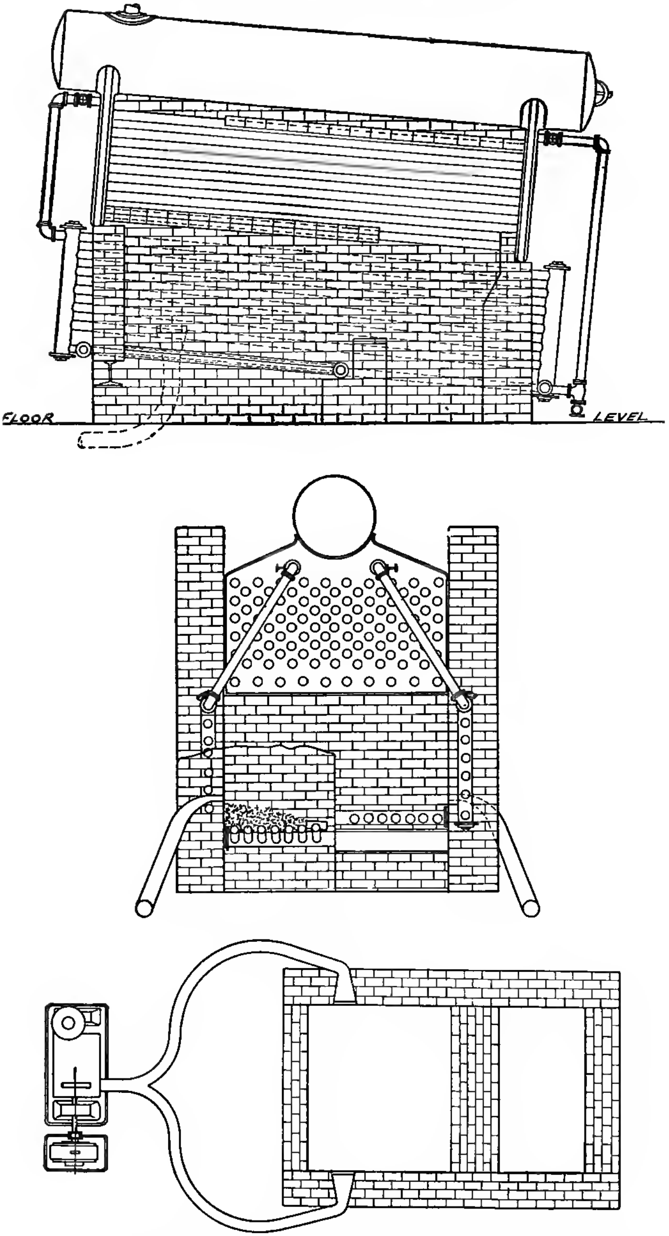

Figs. 47, 48 and 49.—Heine Boilers Arranged for Pulverized Coal.

a volume of about 1 cu.ft. for each 3 lb. of coal burned per hour.

In Fig. 48 are shown the water-tubes which protect the furnace walls from smelting; the bed of ashes, or floor of the combustion chamber; as well as the slot through which the liquid ash may drip; the headers and the tuyeres.

The ash pit should be 3 ft. deep to allow the liquid ash to cool while falling. All joints should be protected from the direct action of the flames.

At the 1914 spring meeting of the A.S.M.E., Mr. F. R. Low presented a paper entitled " Pulverized Coal for Steam-Making " which described the following forms of apparatus used for powdered coal.

There have been three general types of apparatus produced: Fig. 50 shows the Pinther, in which the powdered coal is emptied into a hopper above a feed-controlling mechanism and is then carried into a furnace by natural draft; the second type is that having a mechanical feed,

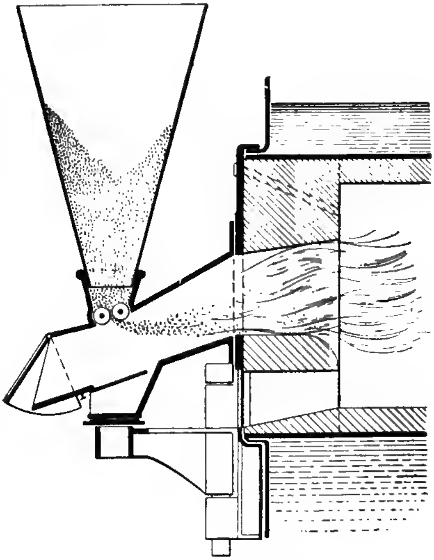

FIG. 50.—Pinther Apparatus.

like the revolving brush of the Schwartzkopf apparatus, Fig. 51; and the third form is that in which the coal is blown into the furnace, as in the Day or Ideal apparatus.

With the first type, boiler efficiencies of from 75 to 80 per cent were obtained, but the capacity was limited. When sufficient draft was applied to introduce a considerable amount of coal, the velocity was such as to carry unconsumed particles of coal into the back connection and tubes. When fuel was introduced into the powdered fuel furnace at a rate which gave the full rated capacity of the boiler, a particle remained in the combustion zone of an ordinary furnace less than half a second.

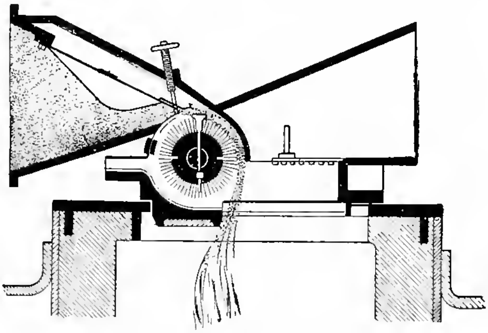

Fig. 51.—Schwartzkopf Apparatus.

In 1910, Mr. J. E. Blake installed under a 300-horse-power water-tube boiler at the Henry Phipps power plant the arrangement shown in Fig. 52. The pulverizer served as its own blower, sending the powdered coal, mixed with air, to the furnace; where, in this installation, it was introduced by a series of nozzles extending across the width of the furnace. A little less than the rated horse power of the boiler was obtained, with an efficiency of about 79 per cent.

A later form of the Blake apparatus was installed in the winter of 1913 at the Peter Doelger brewery in New York. The powdered coal was delivered into the top of an exten-

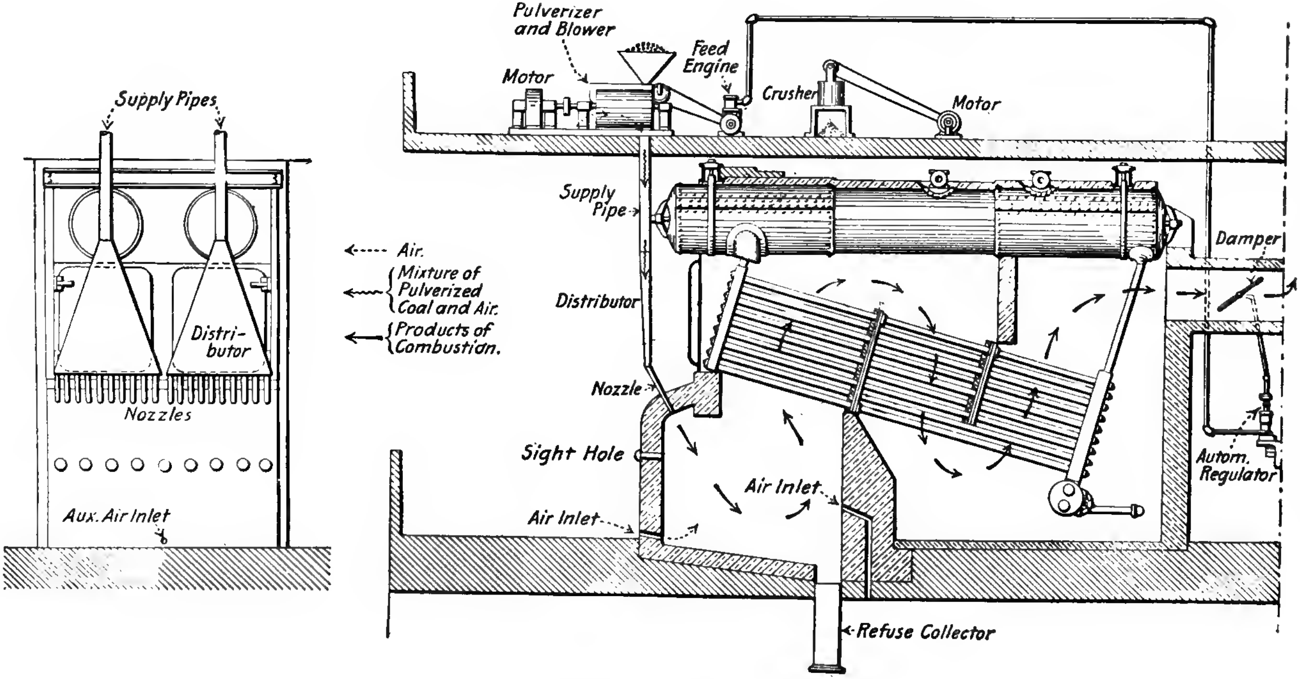

FIG. 52.—Blake-Phipps Apparatus.

sion furnace or " Dutch oven." Smokeless combustion and high efficiency were obtained, the principal trouble being from slag, which accumulated on the roof and side of the furnace and piled up in such masses upon the floor that frequent shut-downs were required for its removal. As much water was evaporated with 1000 lb. of the powdered coal as had formerly been evaporated with 1400 lb. of ordinary coal, but the cost of furnace maintenance, the frequent laying-off of the boiler for the removal of slag, and the cost of pulverizing, counteracted this advantage and the system was abandoned after a trial of about eight weeks.

Mr. Claude Bettington of Johannesburg, South Africa (located in a section where the price of coal is high), attacked the problem by designing a boiler especially for use with powdered coal. He took out his first patent in the United States, but the boiler was first commercially exploited in England. In this boiler, the feed is upward, as shown in Fig. 53, through a water-jacketed nozzle in the center of a vertical furnace. The pulverizer acts as a blower, and the air supply is preheated. From the pulverizer the coal passes to a separator, where the larger particles settle out and return again to be treated, the finer passing on as coal in suspension. As a particle has to pass twice the length of the furnace (upward and downward) to escape, there is no difficulty in obtaining complete combustion.

The inner row of tubes of the circular furnace are covered with a special refractory covering to within a short distance of the bottom header, making a brick-lined combustion chamber. Special bricks are placed loosely around the tubes, but they soon become coated with molten ash and slag, which weld them into a solid wall and close the crevices between the lining and the top header. The ash which is not so slagged to the furnace surfaces, or carried out by the draft, drips into the ash pit below the lower header. The destructive effect of an impinging flame upon the brickwork is avoided by receiving the flame upon the lower head of the central drum, or upon the accumulation of gas in

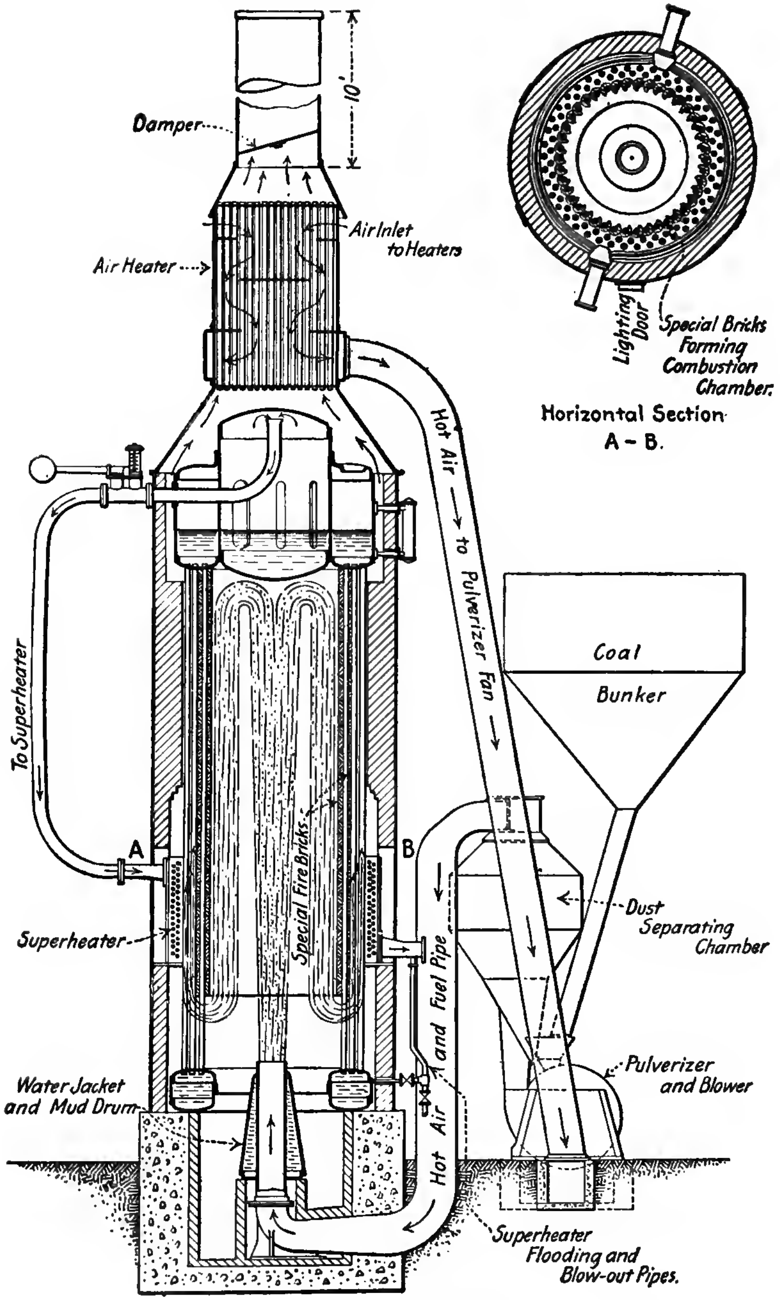

Fig. 53.—Bettington Boiler.

the upper end of the chamber. The region of greatest heat intensity is in the core, while the tubes and shell are subjected to the lesser temperatures of the somewhat cooled gases, which have not yet passed away. The radiant heat is very effective upon tubes and shell, and the metal surfaces must be kept perfectly clean. Particular care must be taken as to the water level. One of these boilers having 2606 sq.ft. of heating surface has been running for over four years at the works of the builders. It evaporates regularly 14,000 lb. and has been worked up to 22,000 lb. of water per hour. These rates, however (5.4 and 8.4 lb. per square foot of heating surface) are attained with stoker-fired boilers using ordinary coal.

A contributor to *Power* who has had two of these boilers in charge says that the steel head of the upper drum burned through at one time, probably because dirt collected upon it; and that in spite of the cooling effect of the tubes the special bricks forming the furnace quickly burn away, and frequent renewals are necessary. Care must be taken lest the lining burn through and the gas be short-circuited. Although this boiler will burn low-grade coals successfully, and while under steam is easily managed, one fireman being able to look after several boilers, these advantages are largely offset, in his opinion, by high cleaning and maintenance charges.

The makers say their experience has been that a lining will last about two years, and that even large holes will automatically seal up. The parts which require most frequent renewals are the beaters and liners of the pulverizer. These are of manganese steel, and can be replaced in about two hours. The makers claim an approximate life for the beaters corresponding with 1500, and for the liners with 2000 tons of coal handled. A user, after ten months of experience, says that the set of blades runs from 1000 to 1200 hours. The use of heated air in the pulverizer allows coal having 15 per cent or more of moisture to be handled successfully; a separate heater or dryer is recommended with large boilers. The makers allow 2 to 3 per cent of the boiler capacity for pulverizing. There has been some trouble from leaky water jackets, putting the flame out, but this has been overcome by the use of welded jackets. The CO_2 is carried at about 15 per cent in regular practice. The possibility of getting an adequate supply of oxygen to the finely comminuted carbon facilitates perfect and smokeless combustion with a minimum air supply, but with the rates of combustion demanded in present practice the result is often an excessively high temperature with erosive and reducing characteristics which, however good they may be for metallurgical purposes, are not favorable to the longevity of a boiler furnace. If this temperature is kept down by feeding less fuel, the capacity is limited, while if it is kept down by using an excess of air the economic advantage just cited is sacrificed.

Boiler at Works of the General Electric Company. Mr. A. S. Mann has described in the General Electric Review some interesting results from the burning of powdered coal under a boiler. He fitted up an old boiler furnace to burn

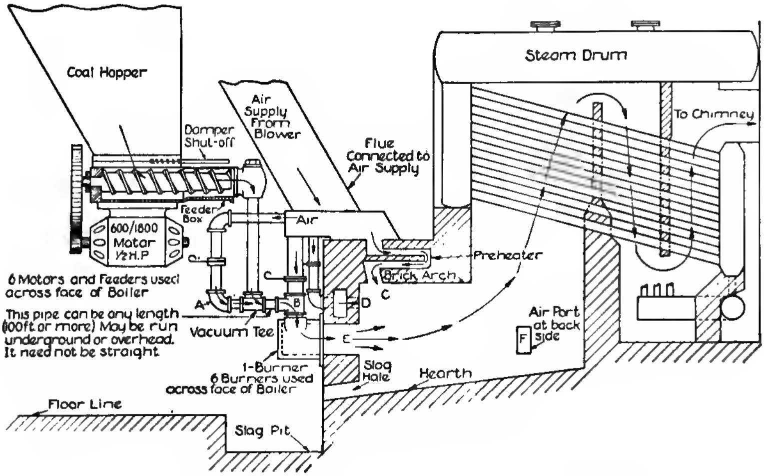

FIG. 54.—B. & W. Boiler for Powdered Coal.—General Electric Company.

coal dust. It was a single 474 horse-power (10 sq.ft. rating) unit that had formerly been fitted with an extension front, making a 4-ft. Dutch oven, for burning oil. He used the same oven and the same front for the coal furnace, but the internal arrangements were altered. Fig. 54 shows a longitudinal section of this furnace, Fig. 55 is a photograph of the front, and Fig. 56 is a diagram of the front.

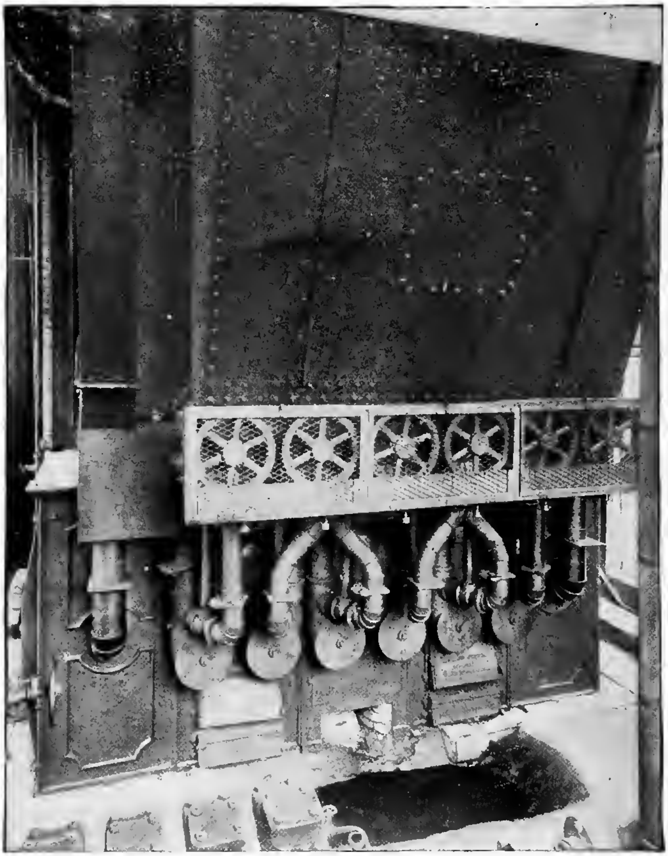

Fig. 55.—Powdered Coal in B. & W. Boiler.

The same feeders and the same driving gear are used as those shown in Figs. 34 and 40. In order to perfect the mixture and to supply both air and coal in small quantities six burners and six feeders were used. Air is admitted at six separate ports; that is, each particle of coal encounters six air currents before it passes on to the heating surface; and every air current is pointed across, or at an angle with, the burning current, thus making the stirring action perfect. In consequence, combustion is virtually complete in 8 ft. of travel even when carrying 200 per cent of normal load. Five hundred and twenty pounds per front foot of furnace have been burned with only 7 ft. between header and floor line. The boiler has carried 265 per cent load long enough to show that such loads are possible, and 220 per cent or more can be carried indefinitely, for there are no cleaning periods.

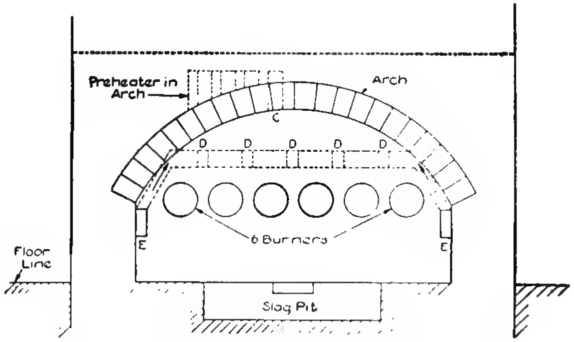

FIG. 56.—Front of Boiler.—General Electric Co.

The six burners across the furnace front are so arranged that the air currents issuing from them revolve in counter directions with respect to each pair. The diagram of Fig. 57 shows this relationship. The air currents act like a train of toothed gears at the tuyere mouth and so tend to preserve a path of travel normal to the general gas current. These swirling masses proceed a little way only, when they meet with air from the arch ports. Fig. 58 shows this movement. The swirls move onward in a corkscrew path, and are met with hot air from *A*. The result is the curve *D*.

The whole volume follows this path and can be plainly seen at light loads making its turn beneath the arch. There are six curves like *D*, one for each burner, and each curve is a corkscrew at least part way. The side wall currents help to prolong the mixing action.

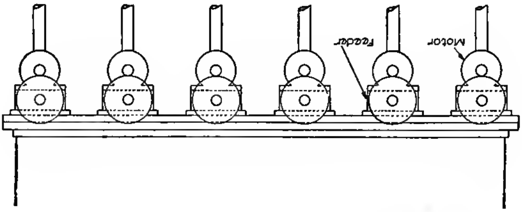

Fig. 57.—Arrangement of Burners.—B. & W. Boiler.

One difficulty presents itself in burning powdered coal that is not met in burning coal by the usual processes. Powdered coal is burned in suspension, and as it travels at 40 or 50 ft. per second it must be consumed in one-sixth second or so. If it is not, it will not be completely oxidized. During this brief time interval there is only one-fifth of a pound burning in this boiler, even at heaviest loads. At no

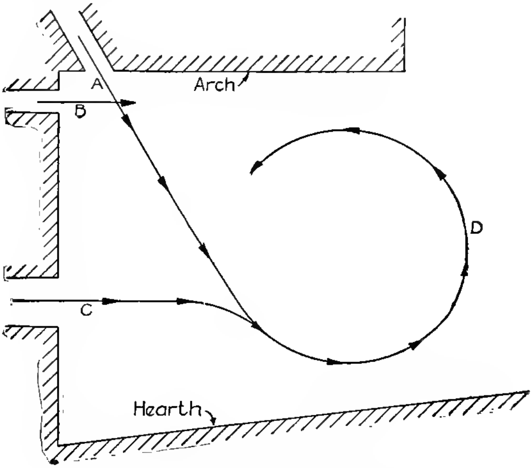

Fig. 58.—Air Currents in Boiler Furnace.

instant is there a greater quantity of coal than this in the furnace. With a grate, no coal particle need burn in a short time, the average time for all particles being half an hour, for there is a ton and a half or so on the grate, burning slowly. This apparent disability really works to the advantage of powdered coal.

For starting a first fire beneath this boiler, an armful of kindling was placed at the mouth of one burner and lighted; then secondary air was admitted at this burner, followed by primary air. A switch started a motor and its feeder, sending down coal; and with a puff of smoke the fire was going. The next burner caught from the first and so two more, making four in all, were set at work. The memorandum taken at the time was:

8:26 A.M., light fire, four burners $\frac{2}{3}$ on;
8:33 A.M., 10 lb. pressure;
8:46 A.M., 140 lb. pressure.

At 8:46 A.M. the fireman checked his coal feed and went up overhead to open the stop valve, and in two more minutes the boiler was carrying its load.

This fire was started in a new cold furnace beneath a boiler full of cold water. With half the coal-burning capacity in use, pressure was up in twenty minutes.

The first boiler trial gave 68 per cent efficiency with 131 per cent of normal load. Efficiencies were calculated by dividing the heat in the steam by the heat in the coal (laboratory test) that produced it. That is, if there were realized 10 lb. of equivalent evaporation per pound of coal and the coal contained 14,000 B.t.u., the efficiency was $(10 \times 966) \div 14{,}000 = 0.69$. Successive trials gave the results shown in the table below:

RESULTS OF BOILER TRIALS

	1	2	3	4	5	6	7	8	9	10	11
Load, per cent.	131	186	212	119	97	136	154	154	141	164	205
Efficiency, per cent.	68	63.8	65.8	68	71.8	65.5	71	69.4	66.1	63.7	75.7
Air, cu ft. per lb. coal	210	178	150	190	250	181	200	226	216	168	208
Flue, temperature. .	559	684	786	583	568	652	693	685	628	678	724

Since the last and best trial the boiler has given as good or better efficiencies for a week at a time, including coal for all purposes, and using railroad weights for coal, the fire being put out at 5 P.M. and kindled fresh at 7:30 A.M. every day.

The earlier experiments showed nothing remarkable in economy, but in the beginning it was not known how much air to use or where best to admit it. After experiment No. 5, observations began to coördinate. Nos. 7 and 8 were instructive, but some mistakes were made before reaching No. 11, and this was not final. Better work can be done with less air, though perhaps there are many fires not giving 75.7 per cent efficiency at 205 per cent load.

Mr. Mann experimented in a comprehensive way with air dampers, noting air volumes, flue temperatures and color of smoke. Each air supply had its damper, and these were adjusted independently. With a given coal feed if it was found that changing the points of application of air permitted a reduction in air volume, with an accompanying rise in flue temperature and with no smoke, it was concluded that an improvement was being made.

In this way it was found best to admit as little air at *A* and *B* as possible, a great deal at *C*, some at *D*, and a little at *E* (*F* is used only on heaviest loads, that is above 210 per cent). In general it may be stated that, as the air supply departs from 200 cu.ft. per pound of coal, efficiency falls.

The operator is supplied with gauges which gave him the heights of water column corresponding with definite air volumes. Each gauge is marked with its corresponding number of coal notches on feeder rheostats. The fireman thus makes the water column fix his coal feed. Dampers are marked and results are definite.

It is to be observed that in measuring air the volume is much better than measuring the CO_2 in chimney gases. Two hundred feet of air gives CO_2 of about 15.3 per cent; 208 ft. gives 14.7 per cent; and this small change (which no CO_2 apparatus can be sure of) gives a marked change in evaporation. The same change in air volume makes the water column move $\frac{1}{4}$ in. Furthermore, the fireman knows of any change instantly. He measures it and he measures *all* of the air: while the CO_2 content is judged from a minute sample and is half an hour behind the time.

It will pay so to arrange the air piping on any boiler that air volumes can be measured instantly, and this is true whether a chimney or a fan produces the draft. A nozzle plug is used in the pipe, though perhaps a Pitot tube might do; however, the nozzle plug acts well and it is liked. If a fireman sees his water column go up he knows that a hole is coming in his fire and he knows it right away. This knowledge is of more value to him than any other information of the sort he could have.

Boiler trials already made point the way to improvement. There is enough heat in the flue gases to warrant the placing of heating surface in its path. Everything in the shape of tar has been burned out of the fuel, and it is planned to put about 600 ft. of $1\frac{1}{4}$-in. tubing in the breeching and send feed water through it. The stack is clear. All soot drops in the gas chambers long before reaching the stack, so that all troubles commonly met with on this account are absent. More trials will be conducted when this addition is ready.

Other losses are not great. Radiation from the furnace is small, for the furnace is virtually surrounded with air passages, and heat that gets into them is returned to the furnace. These air passages, and the deflecting air currents, *C*, *D*, *E*, and *F*, do much toward protecting the furnace walls. One arch has been burned out. It melted down from 9 in. to 4 in., when it fell, but it has stood up nearly six months. It did not run every day with heavy load and did not run nights at all; but it was made of common fire bricks which are not intended for high temperatures. The new arch is of better material, the bricks costing $37.00 per thousand. It may pay to use carborundum.

As to how much it costs to fire boilers with powdered coal, that depends upon how much is made. Coal has to be crushed, elevated, dried and distributed, whatever burning system is used. There are two elevations and the additional pulverizing for powdered coal. The question of real interest is, how much more does it cost to prepare and burn coal than by the usual process. In this plant, the pulverizer is small, and the first cost with motor installed was about $1000 per ton pulverized per day. If it were to run only five hours a day, leaving ample time for repairs, fixed charges would amount to about 7 cents per ton, allowing 10 per cent per year.

Electric current costs, in cents per ton, are as follows: Driving dryer, 1.95; two elevations, 0.77; pulverizing, 14.8; which makes 17.52 cents per short ton for current and 24.52 cents total cost including fixed charges. This total is reduced by about one-third with large pulverizers.

The pulverizer calls for some attention, but it is in the coal house with other machinery and whatever labor it needs is more than made up in decreased labor of firing. The blower at the furnace gives a pressure of 3 oz., which is ample, so that 25 cents additional per ton is all that can be charged against pulverized coal. The plant has not run long enough to say what the cost of repairs will be, but two years of experience have shown that it is nominal, or at least no greater than is met with in all coal-handling machinery.

Figs. 59 and 60 show the plan of a powdered coal plant which the Fuller Engineering Company have recently installed for the Missouri, Kansas & Texas Railroad, at Parsons, Kansas. This plant will, when completed, contain ten 250 horse-power Heine boilers; although at the present time only eight boilers are installed.

Fig. 61 gives a cross-section through the boiler setting and shows just how the powdered coal is handled into the combustion chambers.

The engineers of this plant made the following replies to questions submitted by the author:

FIG. 59.—M. K. & T. R. R. Plant, Parsons, Kas.—Fuller Engineering Co.

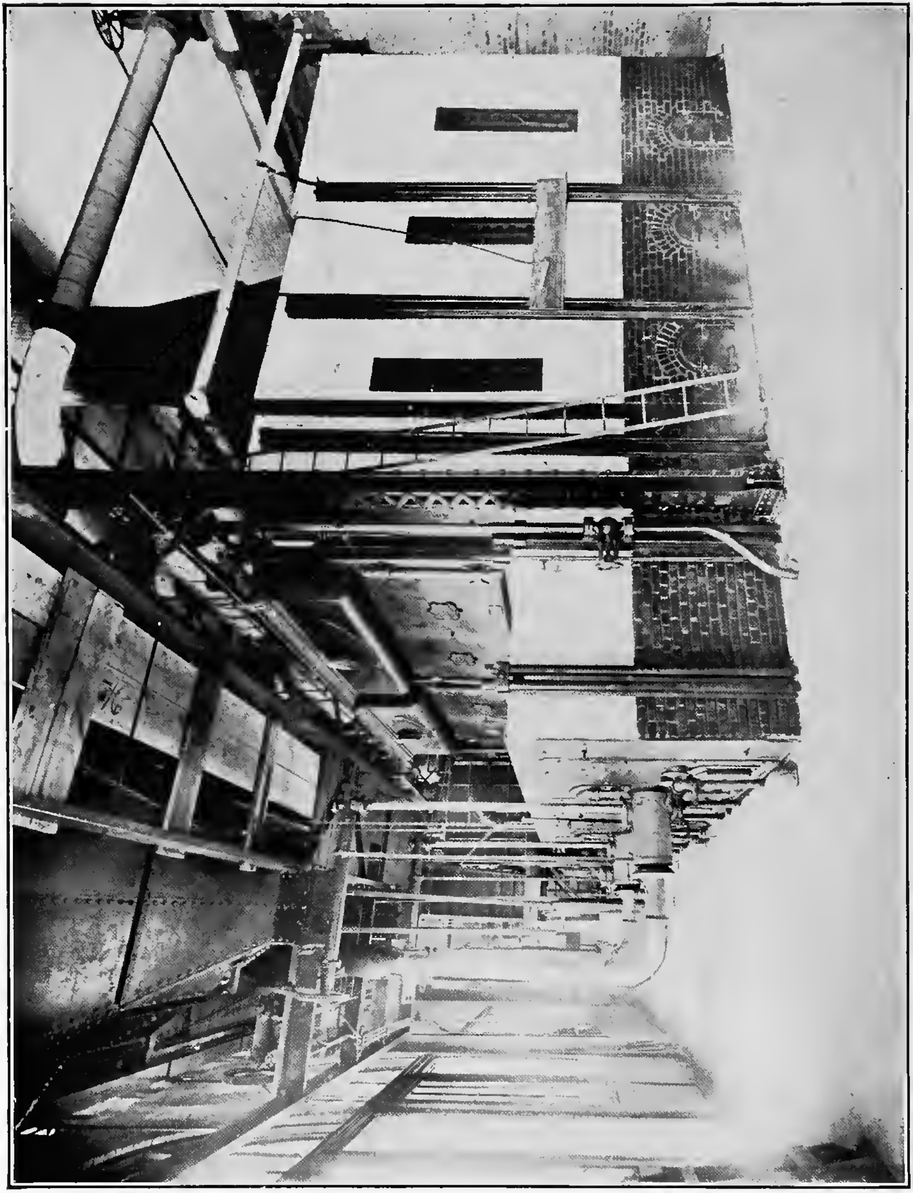

FIG. 60.—M. K. & T. R. R. Plant, Parsons, Kas.—Fuller Engineering Co.

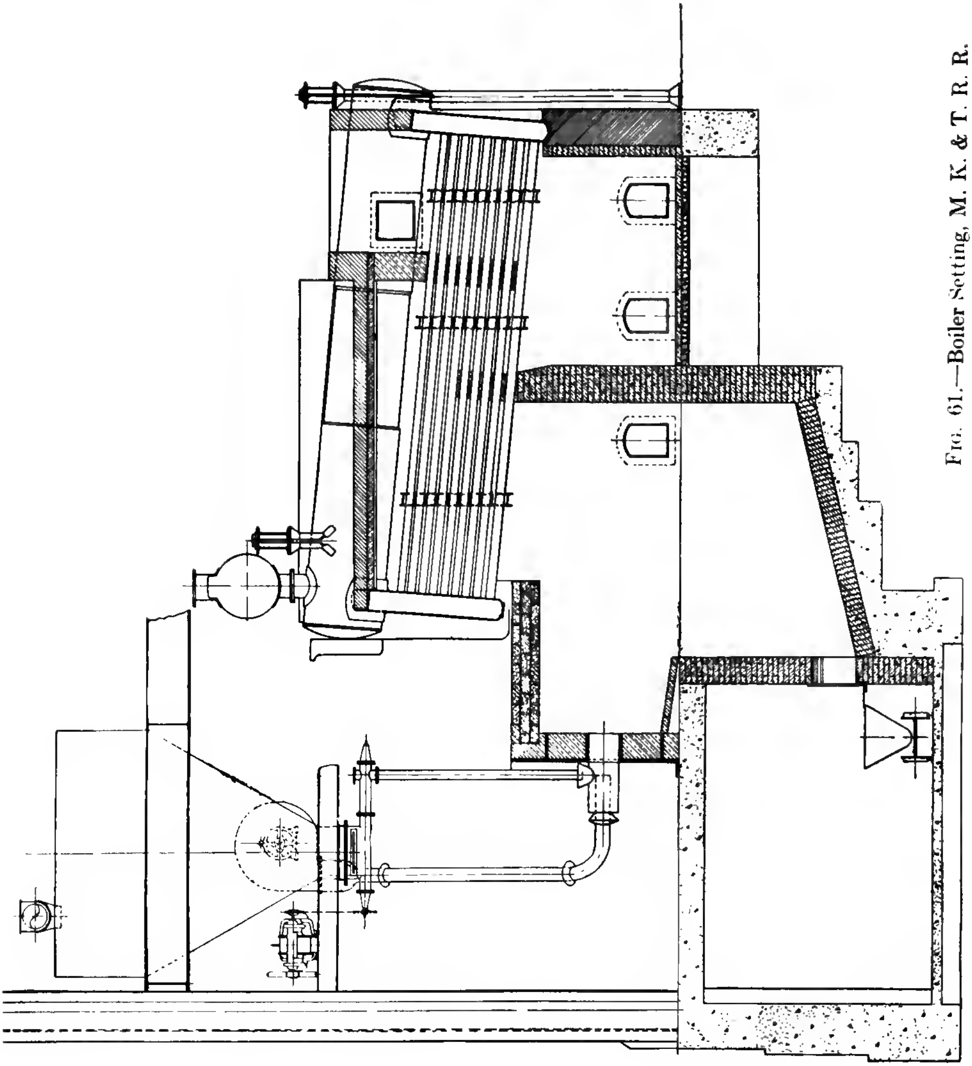

FIG. 61.—Boiler Setting, M. K. & T. R. R.

1. The amount of coal burned per horse power depends strictly upon the quality of coal burned. It is safe to assume that a boiler efficiency of not less than 75 per cent can readily be obtained with powdered coal as a fuel. In our practice we base our calculations on using 1293 heat units per pound of water from and at 212°. The equivalent evaporation obtained per pound of coal burned should equal the heat value of the coal used divided by 1293.

2. The steam pressure will be 150 lb., and with feed water at a temperature of 200° the factor of evaporation will be 1.0584.

3. As to feed control, there will be located directly below, and attached to, the powdered coal storage bin, a feed-screw operating inside of a bored cast pipe with very little clearance (to prevent the coal from rushing around the screw or passing the screw when in operation). The feed-screw is driven by means of a motor, driving directly to a speed regulator, and then through the speed regulator to the feed screw. Air supply for carrying the coal into the furnace and for combustion will be furnished by a fan driven by a direct-connected motor. There will be one fan for each two boilers. There are gates located in each blast pipe leading to the combustion chambers, and also a regulating cone for varying the effective area between the blast pipe and the outside pipe, at the entrance point in the front wall of combustion chamber. The regulating cone controls the percentage of excess air induced. By means of the equipment outlined, positive control of the amount of coal as well as of the amount of air supplied will be attained and also the pressure of air admitted to the furnace will be under control.

4. The fireman will be governed in making adjustments by conditions and by the demand for steam. With proper apparatus at hand, he will be able to regulate the supply at all times. Firemen having had some experience with powdered coal burning should be able to judge by the appearance of the furnace whether proper combustion is being obtained.

5. With the furnace properly designed and proportioned to the quantity of coal to be burned, no serious effects will occur because of flame impingement against the bridge wall. Furnaces for burning powdered coal are to-day designed so that excessive velocities are eliminated. High velocities cause destructive conditions.

6. It is not expected that the conveyor screw will break with properly designed feeding mechanism, but an extra screw should be on hand. Slides are located between the feeder and the bin proper, so that should any accident occur requiring the insertion of a new feed-screw, this can readily be done. The bin capacity is designed to suit operating conditions. A ten-hours' supply can easily be stored in bins in front of the boilers, and more if desired. The design of the bins, however, should be such that when coal is being fed from the bottom the majority of the coal is in motion.

7. With coal properly prepared and pulverized and burned in a properly designed furnace, 75 to 80 per cent of the ash will deposit in the combustion chamber, the balance of the ash being so fine after the carbon is burned out that it is carried away as a light haze.

8. The coal will not cake in the bin in a properly managed plant, or in one which has suitable equipment. The drying apparatus is sufficiently large to take care of the maximum powdered coal demand.

9. There are 38 lb. of powdered coal to a cubic foot.

10. So far as we know the boilers will be intermittently fired, operating full during the day and at about one-quarter capacity at night.

11. We have raised steam in a 400-horse-power Rust boiler with cold setting, and with feed water at 180°, in forty-five to fifty-five minutes, to 150 lb. gauge pressure. However, this practice is not good as it forces the setting somewhat and is likely to cause trouble with the furnace walls.

A successful installation for burning powdered coal under a boiler has been in continual service since March, 1915, at the works of the American Locomotive Co., Schenectady, N. Y. Some data on this plant are given by Mr. C. L. Heisler in the Journal of the A.S.M.E. for December, 1916. The percentage of CO_2, by a recording chart checked by the Orsat apparatus, is rarely under 16 and is oftener above 17. The boiler is one of a battery of Franklin water-tube boilers, the rest of which employ mechanical stokers. It was fitted with a deep hopper-shaped furnace extending the whole length of the boiler and tapering down to a slag pit at the bottom, without vertical walls or arches. The coal enters the front end at an angle of about 45° with the vertical. The 9-in. front sloping furnace wall is supported by a row of scrap boiler tubes. The lower row of water tubes is shielded at the rear half of its length by the ordinary tiling of a Heine setting.

Coal is fed by a screw feeder from a hopper into the air blast at a point about 3 ft. away from the furnace tuyeres. Three tuyeres are used, consisting of wrought-iron pipe nipples, 10 by 24 in. The air blast pressure is from ½ to 1½ oz., atmospheric pressure is maintained in the furnace, and there is a slight suction inward at the slag hole at the base of the furnace.

The sloping side walls of the furnace are coated with 1 to 3 in. of slag and are in perfect condition. No trouble is experienced from coke or cinders clogging the spaces between the water tubes. Repairs have been trifling. Evaporative tests have shown a materially higher efficiency than could be obtained from a duplicate boiler with ordinary coal fired by mechanical stokers, and a much quicker response is made to sudden demands for steam. An ordinary fireroom helper was able to give the furnace all the attention required.

CHAPTER IX

POWDERED COAL FOR LOCOMOTIVES

Mr. J. E. Muhlfeld, in a paper read before the New York Railroad Club at its February, 1916, meeting, and in a subsequent paper presented to the A.S.M.E. at its meeting of December, 1916, has presented data on the application of powdered coal to locomotives from which the following is largely abstracted.

The present annual consumption of powdered coal in the United States is over 8,000,000 tons. The general use of this fuel in industrial kilns and furnaces has demonstrated its effectiveness and economy.

The expenditure for locomotive fuel (which the Interstate Commerce Commission reports as $249,507,624, or about 23 per cent of the transportation expenses of 242,657 operated miles of steam railway in the United States, for the fiscal year ending June 30, 1915) is, next to labor, the largest single item of cost in steam railway operation.

The necessity for conserving the limited supply of oil in the rapidly exhausting fields for other than locomotive purposes will shortly eliminate it from railway motive power use.

The large quantity of steam used by the modern locomotive necessitates high rates of evaporation, and these can be economically obtained only by some means for burning solid fuel other than on grates; in order to reduce the waste due to the loss of combustible dust and that from imperfect combustion.

Steam locomotives must be equipped to approximate more nearly the electric locomotive, with regard to the elimination of smoke, soot, cinders and sparks; the reduction of noise, time for dispatching at terminals, and stand-by losses; and the increasing of the daily mileage by longer runs and more nearly continuous service between general repair periods.

Workmen of a higher average quality should be induced to enter the service as firemen, eligible for promotion as engineers, by reducing the arduous work now required to shovel ahead and supply coarse coal to grates, and to rake and clean fires and ash-pans.

The future steam locomotive will be required to produce maximum hauling capacity per unit of total weight, at the minimum cost per pound of draw-bar pull, and with the least liability to delay because of mechanical failures.

In meeting the conditions outlined above, powdered coal has succeeded because of the following advantages:

1. It offers opportunity for even greater accomplishments in the steam railway field than have heretofore been obtained through its use in cement kilns and in metallurgical furnaces.

2. It produces a saving of from 15 to 25 per cent in coal of equivalent heat value, as compared with hand firing of coarse coal on grates. Powdered coal may run as high as 10 per cent in sulphur and 35 per cent in ash and still produce maximum steam-heating capacity; so that otherwise unsuitable and unsalable or refuse grades of coal may be utilized, and hence the saving in cost per unit of heat evolved will be a considerable item.

3. It enables us to maintain fire-box temperatures and sustained boiler capacities equivalent to and exceeding those obtainable from crude or fuel oil.

4. It maintains the steam locomotive on its present relatively low first cost and expense-for-fixed-charge basis, and further reduces the cost for maintenance and operation of large units.

5. It eliminates the waste products of combustion and fire hazards, and permits the enlargement of exhaust steam passages and thus produces increased efficiency at the cylinders.

Commencing with Richard Trevithick's locomotive, which was built in 1803, and was the first actually to perform transportation service, general practice has been to burn wood, coal and other solid fuels in locomotive fireboxes, on grates.

During the early development stages this method provided adequate means for utilizing the relatively high grade available fuel effectively and economically, as the rate of combustion per square foot of grate surface per hour were relatively low. But, during the past twenty-five years, continued increases in locomotive tractive force have so increased required rates of combustion that the quantity of fuel used per unit of work performed is far beyond what may be realized by more effective means now available.

While great progress has been made in the superheating and use of steam, the principal improvements that have been perfected in steam generation have been through enlarged heating surfaces better circulation of water, regulation of air admission and the use of fire-brick arches.

Early Use of Powdered Coal. The Manhattan Railroad in New York City conducted experiments with the use of coal dust in one of their locomotives about fifteen years ago. The pulverizing of the fuel and the discharge of the coal and air into the fire-box were accomplished through the use of a combined pulverizer, blower and steam turbine located on the locomotive. In this case the cylinder exhaust was not used to produce boiler draft; the coal dust was relatively coarse; and no provision was made for precipitating and cooling the furnace slag; all of which factors no doubt contributed to the failure of the experiment.

The Swedish Government Railways have also done some experimental work in the burning of peat and coal powder in small steam locomotives during the past few years, the fuel being prepared before supplying it to the locomotive tender. In this case the powder was blown into the furnace by steam and the fire-box brick work was very complicated.

Various other experimental efforts have been made by railways in the United States and elsewhere, but, so far as is known, they have not until recently resulted in regular train operation.

The first steam railway locomotive of any considerable size to be fitted up in the United States or Canada (or, so far as is known, in the world) with a successful self-contained equipment for the burning of powdered coal in suspension was a ten-wheel type engine on the New York Central Railroad. This locomotive has 22 by 26-in. cylinders; 69-in. diameter drivers; 200-lb. boiler pressure; 55 sq.ft. of grate surface; is equipped with Schmidt superheater and a Walschaerts valve gear; has 31,000 lb. tractive power and was first converted into a powdered coal burner in the early part of 1914.

Since the development of that application similar installations have been made on a Chicago & Northwestern Railway Atlantic type locomotive, and also on a new consolidation type of locomotive recently built for the Delaware & Hudson Company. This latter locomotive is probably the largest of its type in the world. It has 63-in. diameter drivers and about 63,000 lb. of tractive force, having been designed for combination fast and tonnage freight service.

This latest effort toward the burning of powdered coal in steam locomotives has now passed the experimental stage, and arrangements have been made for proceeding with commercial applications as rapidly as the equipment can be produced.

Any solid fuel which in a dry, pulverized form will have two-thirds of its contents combustible, is suitable for steam-generating purposes.

The generally recognized waste, unsalable and otherwise low-value coal mine and strip-pit products, such as dust, sweepings, culm, slack and screenings, as well as lignite and peat, are suitable as are the larger sizes and better grades, for drying and pulverizing with a view to use for steam-generating purposes.

Reference to Figs. 62 and 63 will convey a general idea of the equipment found essential for the burning of powdered coal in a steam locomotive. The particular factors that have been kept in mind in the development of this apparatus have been:

1. To produce equipment that will be readily applicable to either new or existing steam locomotives of standard design.

2. To simplify and standardize the various details and make them interchangeable for the different types and sizes of locomotives.

3. To apply all possible operating equipment, in a self contained manner, to the tender fuel tank; eliminating complicated mechanism for conveying fuel from the tender to the engine, and removing from the cab all special apparatus except fuel and air supply control levers.

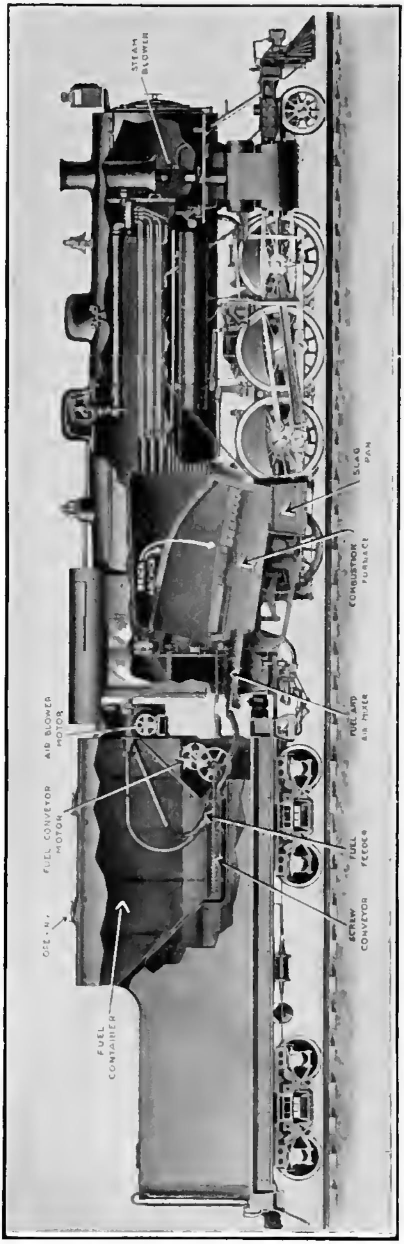

Fig. 62.—Locomotive Equipped for Powdered Coal.

4. To eliminate the necessity for any manual handling of fuel, fire or ashes in the operation.

5. To insure positive control over the fuel feed, in order to meet quickly all conditions of road or terminal operation, and to provide for quick firing-up, free steaming, good combustion, regularity of boiler pressure, uniform fire-box

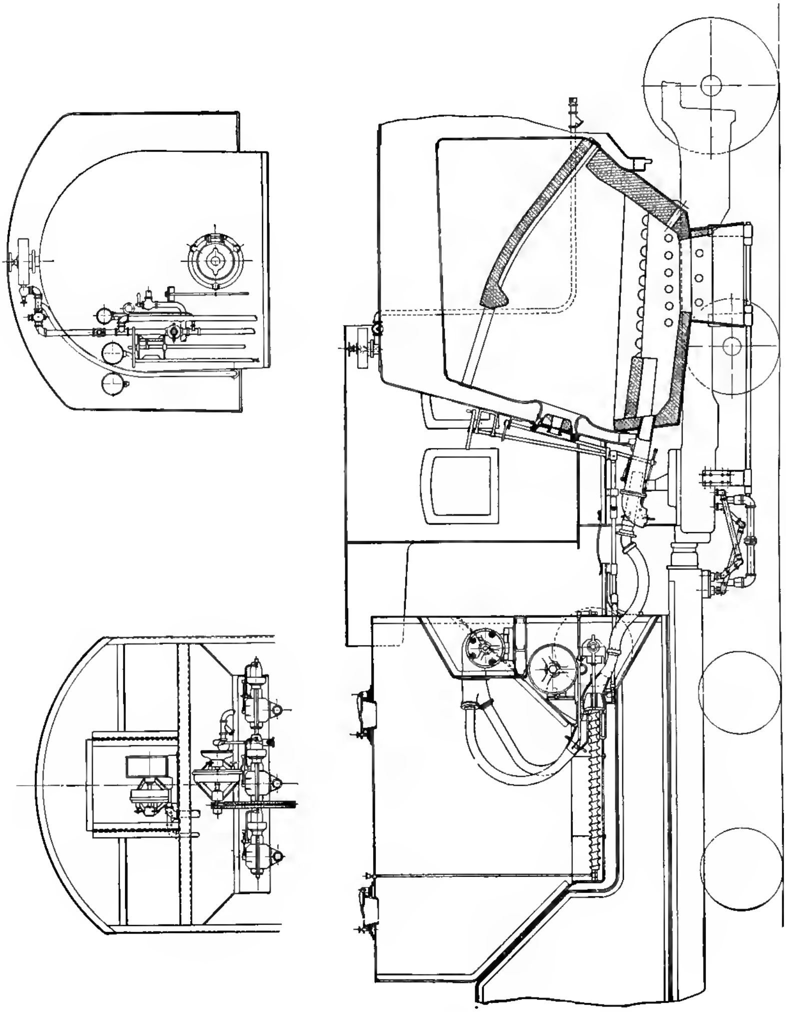

Fig. 63.—Powdered Coal Equipment in a Steam Locomotive.

temperature, and maximum capacity of boiler, with the minimum heat loss.

6. To place the entire regulation of combustion under three hand-control levers in the cab; i.e., fuel feed, air supply, and induced draft (the last employed when the locomotive is not using steam).

7. To provide a type of refractory furnace that will insure ready accessibility to all parts of the fire box for inspection and maintenance.

8. To insure a supply of dry fuel under all conditions of weather.

9. To eliminate the necessity for firing tools, such as scoops, rakes, hoes, slash-bars and grate shakers, as well as to obviate the glare, heat effect, and lowering of fire-box temperature and draft from the opening of the furnace door.

10. To minimize the noise and dust in the cab.

11. To reduce necessary engine-house facilities and delays, and expenses incident to building, preparing, cleaning and dumping fires and hostlering locomotives.

12. To make the powdered coal burning and storage equipment on the engine and tender readily convertible for the use of fuel oil.

In the application of powdered coal burning equipment to existing types of steam locomotives, the following constitute all the changes that are necessary:

Smoke Box. Remove the existing diaphragm, table and deflector plates, nettings, hand holes and cinder hoppers, enlarge the exhaust nozzle opening.

Fire Box. Remove the existing grates, ash pans, fire doors and operating gear; utilize the usual arch tubes and sectional type of brick arch; and install fire-brick-lined fire pan, primary arch, fuel and air mixers and nozzle.

Cab. Install regulating levers for furnace door, fuel and air supply.

Tender. Install enclosed fuel container equipment with fuel and pressure air conveying, feeding, commingling and discharge apparatus, and steam turbine or motor mechanism.

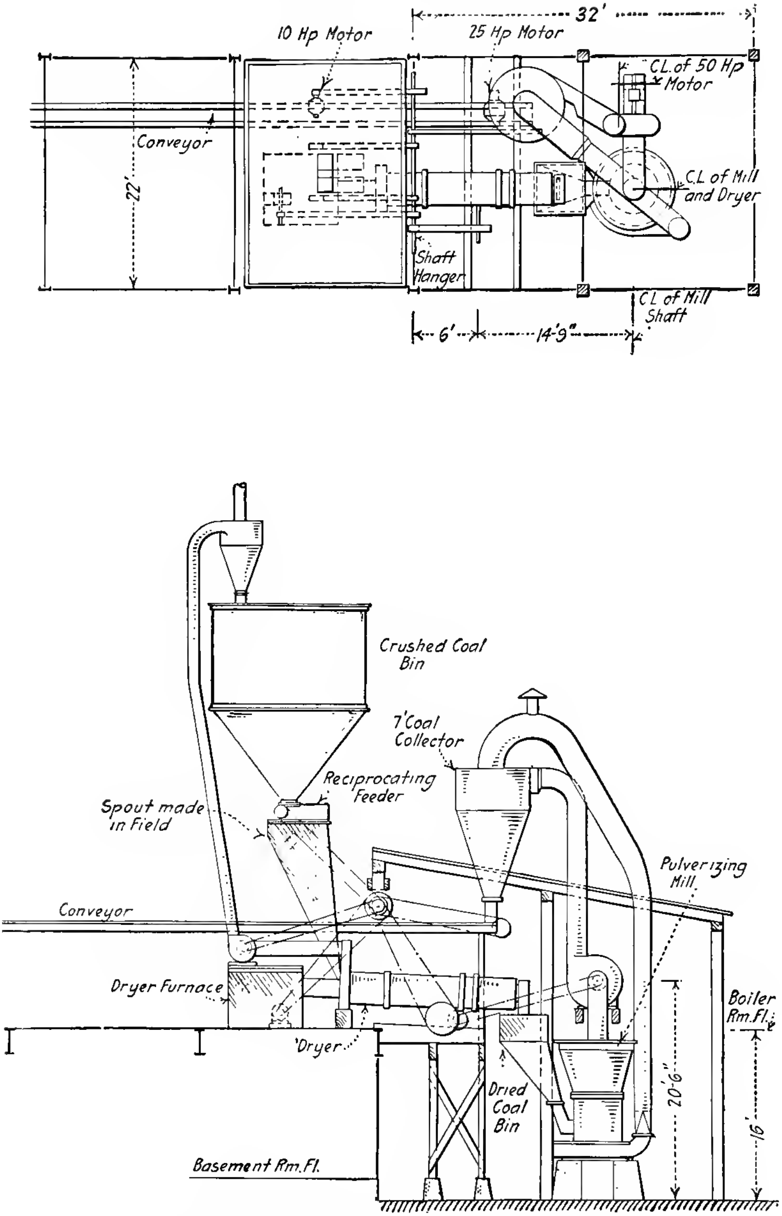

FIG. 64—Single-unit Gravity Milling Plant, Hudson Coal Co. Capacity 2 Tons per Hour

Engine and Tender Connections. These are made by the use of one or more sections of hose, which connect the fuel and pressure air outlets on the tender, with the fuel and pressure air nozzles on the engine. Metallic flexible conduits are employed for conveying the fan blast and fuel-feeding motive power.

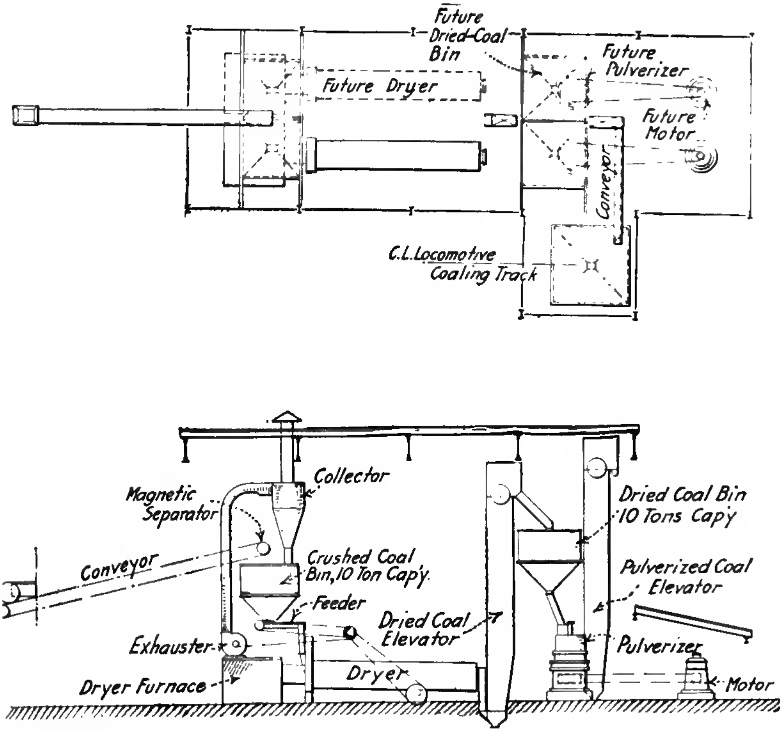

FIG. 65.—Double-unit Plant and Single-bin Locomotive Coaling Station. Capacity 8 Tons per Hour.

Operation. For firing up a locomotive, the usual steam blower is turned on in the stack, a piece of lighted waste is then passed through the fire-box door opening and placed on the furnace floor, just ahead of the primary arch, after which the pressure fan and one each of the fuel and pressure air feeders are started.

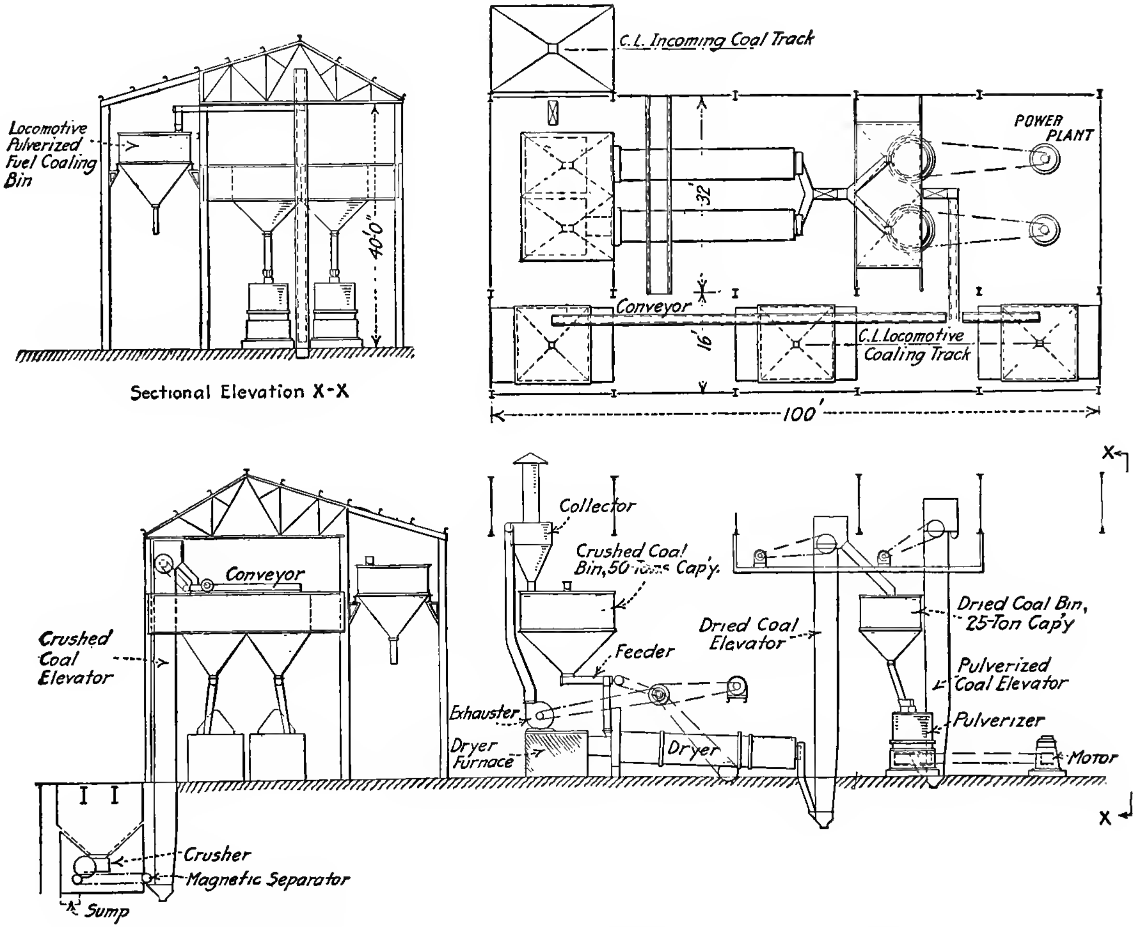

FIG. 66.—Double-unit Plant with Triple-bin for Loading Locomotives. Capacity 16 Tons per Hour.

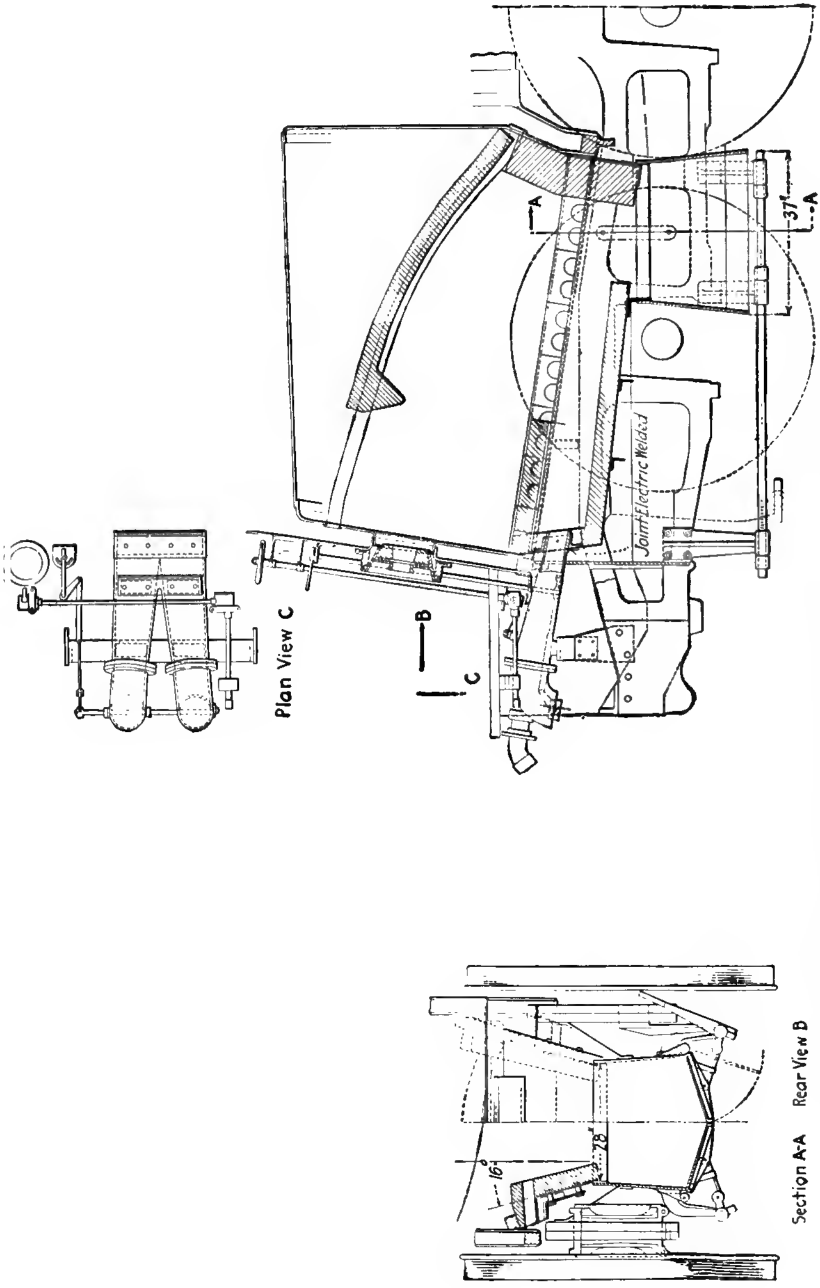

FIG. 67.—Double Burner and Firepan Equipment for Locomotive, Central Rwy. of Brazil.

From forty-five to sixty minutes is ordinarily sufficient to get up 200 lb. of steam pressure from boiler water at 40° F.

After firing up, the regulation of the fuel and air supply is adjusted to suit the standing, drifting or working conditions, the stack blower being used only when the locomotive is not using steam.

The process of feeding and burning powdered coal may be briefly stated as follows: the prepared fuel, having been supplied to the enclosed fuel tank, gravitates to the conveyor screws, which carry it to the fuel and pressure air feeders, where it is thoroughly commingled with and carried by the pressure air through the connecting hose to the fuel and pressure air nozzles and blown into the fuel and air mixers.

Additional air is supplied in the fuel and air mixers; and this mixture, now in combustible form, is drawn into the furnace by the smoke-box draft.

The flame produced when the combustible mixture enters the furnace obtains its average maximum temperature (from 2500 to 2900° F.) at the forward combustion zone under the main arch; and at this point auxiliary air, induced by the smoke-box draft, finally completes the combustion process.

The smoke-box gas analysis will show between 13 and 14 per cent of CO_2, when coal is fired at the rate of 3000 lb. per hour; between 14 and 15 per cent at the rate of 3500 lb. per hour; and between 15 and 16 per cent at the rate of 4000 lb. per hour; so that as the rate of combustion increases, there is no falling off in the efficiency of combustion, as when coarse coal is fired on the grates.

The waste of fuel from the stack, where ordinary coal having a large percentage of dust and slack is used; the lowering of the fire-box temperatures and draft by the opening of the fire door; and the resultant variations in standing and general results under high rates of combustion, are entirely eliminated with powdered coal.

The uniformity with which locomotives can be fired is indicated by the fact that regularly assigned firemen can maintain steam within two pounds of the maximum allowable pressure, without popping off.

As each of the fuel and pressure air feeders has a range in capacity from 500 up to 4000 lb. of powdered coal per hour, and as from one to five of these may be easily applied to the ordinary locomotive tender, there is no difficulty in meeting any desired boiler and superheater capacity.

As in the case of electric locomotives, but little actual operating data are as yet available.

The first complete installations of a fuel-drying and pulverizing plant and locomotive coaling station, in combination with locomotives equipped for burning powdered coal, will be made by the Delaware & Hudson Company and the Missouri, Kansas & Texas Railway, and these are not yet ready for operation. The locomotives so far equipped on other railways are still depending upon the outside or inadequately equipped sources for their supply of powdered coal, which makes the handling somewhat difficult.

Mr. Muhlfeld gives the following record from tests of an Atlantic type passenger locomotive, fired with Kentucky unwashed screenings, 83 per cent of which ran 100-mesh or finer:

LOCOMOTIVE PERFORMANCE

Miles run	171
Running time, hours	3.87
Train, number of cars	5.8
Train, tonnage	291
Speed, miles per hour	44.2
Drawbar pull, pounds	2711
Horse power	319.5
Fuel used, tons	3.82
Water used, gallons	8381
Fuel per horse-power-hour, pounds	6.17
Water per horse-power-hour, pounds	56.48
Evaporation, water per pound of coal, pounds	9.15
Evaporation from and at 212° F., pounds	11.1
Boiler efficiency, per cent	77

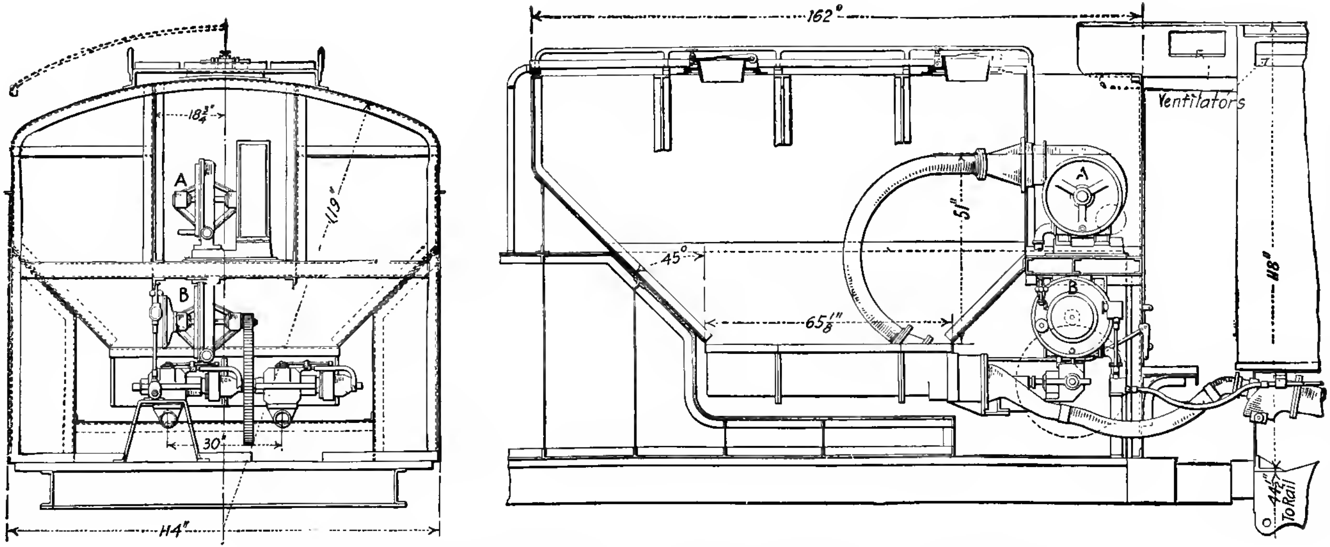

FIG. 68.—Double-Feed Equipment on Locomotive Fender, Central Rwy. of Brazil.

Samples of gas taken from the smoke box gave the results below:

Pounds of Coal Burned per Hr.	Per Cent of		
	CO_2	CO	O
3067	14.5	0.0	4.5
3498	15.2	0.0	2.8
3931	15.2	0.0	4.0
4000	16.4	0.4	2.6

On a 10-wheel locomotive in freight service, three trials gave the results subjoined:

Item.	Pulverized		
	1 Bituminous.	2 Bituminous.	3 Bituminous.
Fineness, per cent through 200-mesh	0.85	0.85	0.85
Moisture, per cent	0.40	0.81	0.59
Volatile, per cent	24.72	36.27	24.36
Fixed carbon, per cent	68.43	58.29	65.05
Ash, per cent	6.85	5.44	10.59
Sulphur, per cent	1.96	0.68	0.84
B.t.u. per pound	14,739	14,334	13,912
Miles run, total	1,324	426	398
Cars per train, average	61	65	60
Adjusted tonnage per train, average	1,719	1,808	1,759
Speed when train was in motion, miles per hour, average	26	25	24
Boiler pressure when using steam (200 lb.), average	198.3	193.5	194.9
Front-end draft when using steam, in. of water, average	7.15	7.79	6.69
Firebox draft when using steam, in. of water, average	3.50	3.22	3.18
Temperature of steam, deg. F.	562	573	555
Coal fires per hour of running time, lb. (average)	3,275	3,063	3,457
Adjusted ton-miles per lb. of coal (average)	12.84	13.97	11.59

The locomotive was worked at its maximum capacity on all trips, about 10 per cent more tonnage being hauled than is usual for like locomotives burning coal on grates; and practically at fast-freight schedule speed. The exhaust nozzle opening was about 25 per cent larger than the maximum for hand firing.

The general results were excellent, particularly with regard to tonnage, speed, combustion, and steam pressure, the latter being maintained at full speed with the injector supplying the maximum amount of water to the boiler.

With the highest-sulphur coal (No. 1) and the highest-ash coal (No. 3) there was less than 1 cu.ft. of slag in the slag box at the end of each run, and practically no collection of ash or soot on the flue or fire-box sheets. In fact, with the No. 3 fuel there were less than two handfuls of slag, ash and soot collected on each trip.

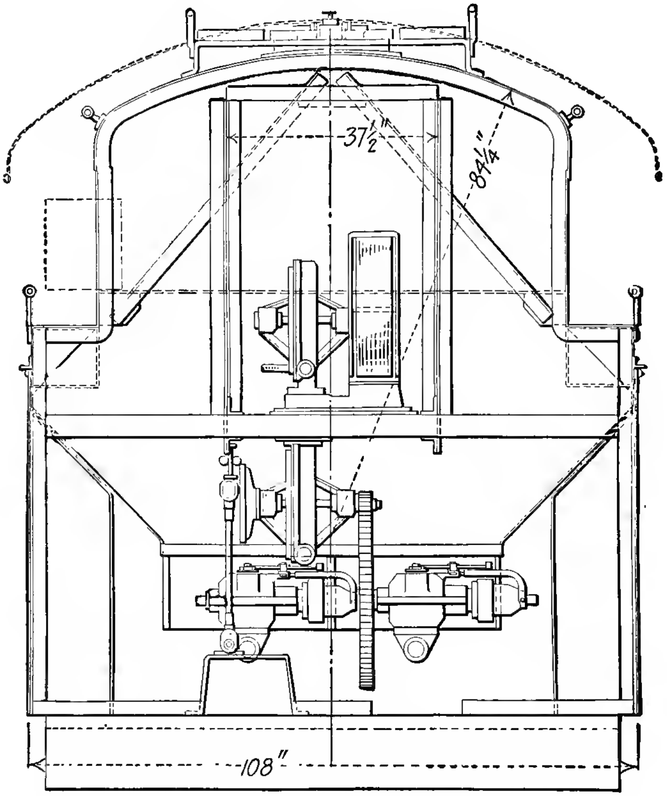

Fig. 69.—Double-Feeder Equipment for Locomotive Fender, N. Y. C. R. R.

Demands upon steam railway motive power to produce increased horse power per hour are becoming more exacting, and there is but little doubt that, through the use of powdered coal in combination with correlated improvements in locomotive design, the steam locomotive can be made to remain the standard unit of motive power for present and future general railway operation, by reason of its general dependability, flexibility, effectiveness, and economy, and its ability, in a revised form, to meet public demands for the reduction of smoke, soot, cinders, sparks and noise.

CHAPTER X

EXPLOSIONS

Much has been said of the danger of explosions accompanying the use of powdered coal. This is partly due to confusion with dust explosions in coal mines. The latter are due to the floating of dust in the air in a confined space. The department of a powdered coal plant in which the coal grinding is done is usually a fit place for an explosion, for it is almost impossible to grind coal without having some dust escape. There is, on the other hand, plenty of opportunity for change of air, which should minimize the possibility of explosions. Dust is sometimes overcome by the use of a grinding system employing exhaust fans. With the atmosphere saturated with coal dust, and all crevices and ledges filled and covered with fine particles, there would seem to be every chance for an explosion. Yet the author has not heard of an instance where explosions have taken place in the grinding room. There have been cases where a match or spark, coming in contact with some of the dust lying on a ledge, has started a fire which has spread rapidly, but this scarcely constitutes an explosion. The dust acts like a long fuse. The remedy seems to be to keep the grinding room as clean as possible, forbidding the use of any open lights or fire.

During one of the writer's inspection trips special inquiry was made regarding explosions. None had occurred at any of the plants visited. In certain cases the bins overflowed and the falling sheet of coal took fire, but there was nothing that could properly be called an explosion.

Mr. W. D. Wood, in the *Railroad Gazette* of July 18, 1913, says of powdered coal explosions:

" I can say positively that there is absolutely no danger

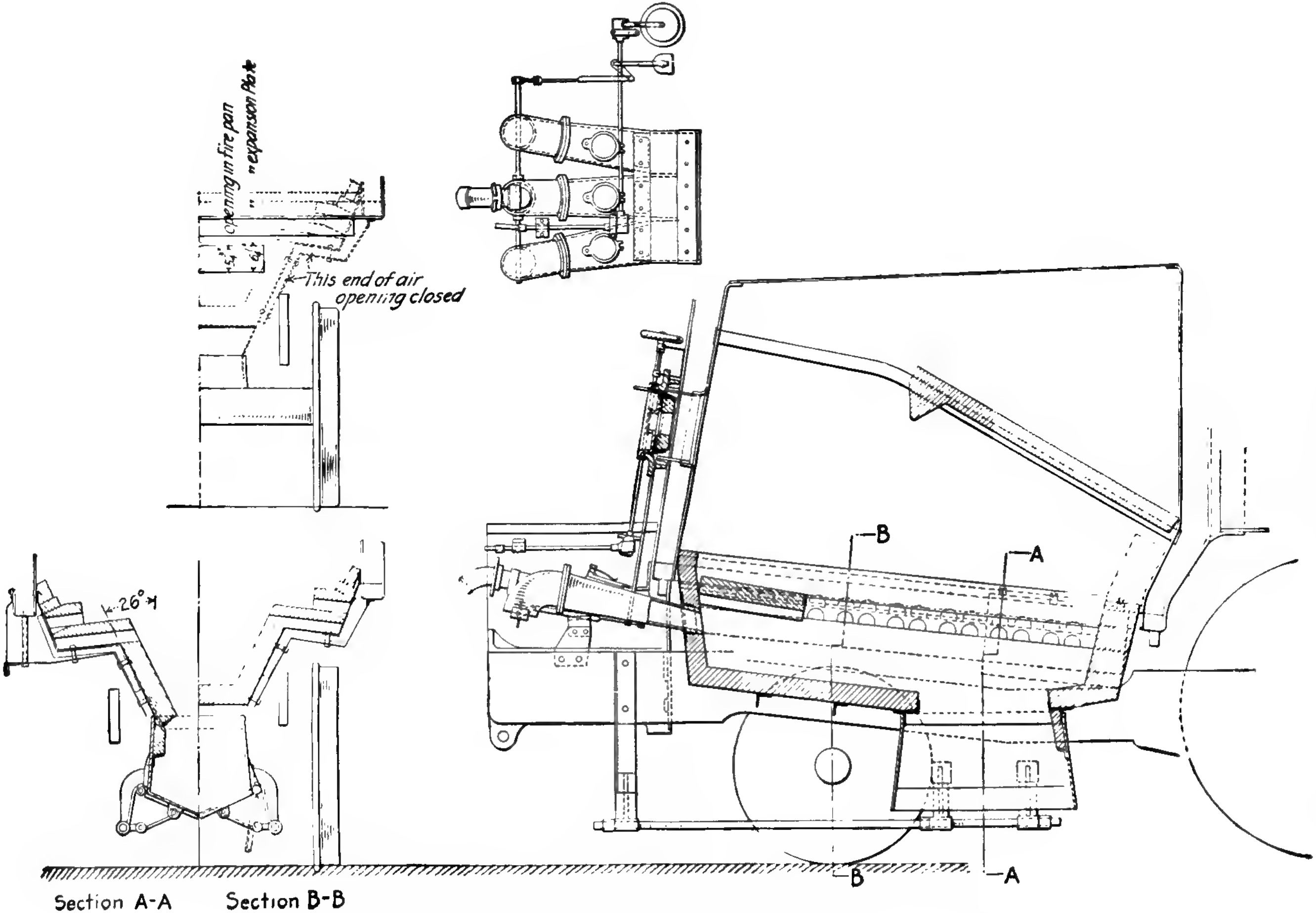

FIG. 70.—Triple Burner and Firepan Equipment for Locomotive. N. Y. C. R. R.

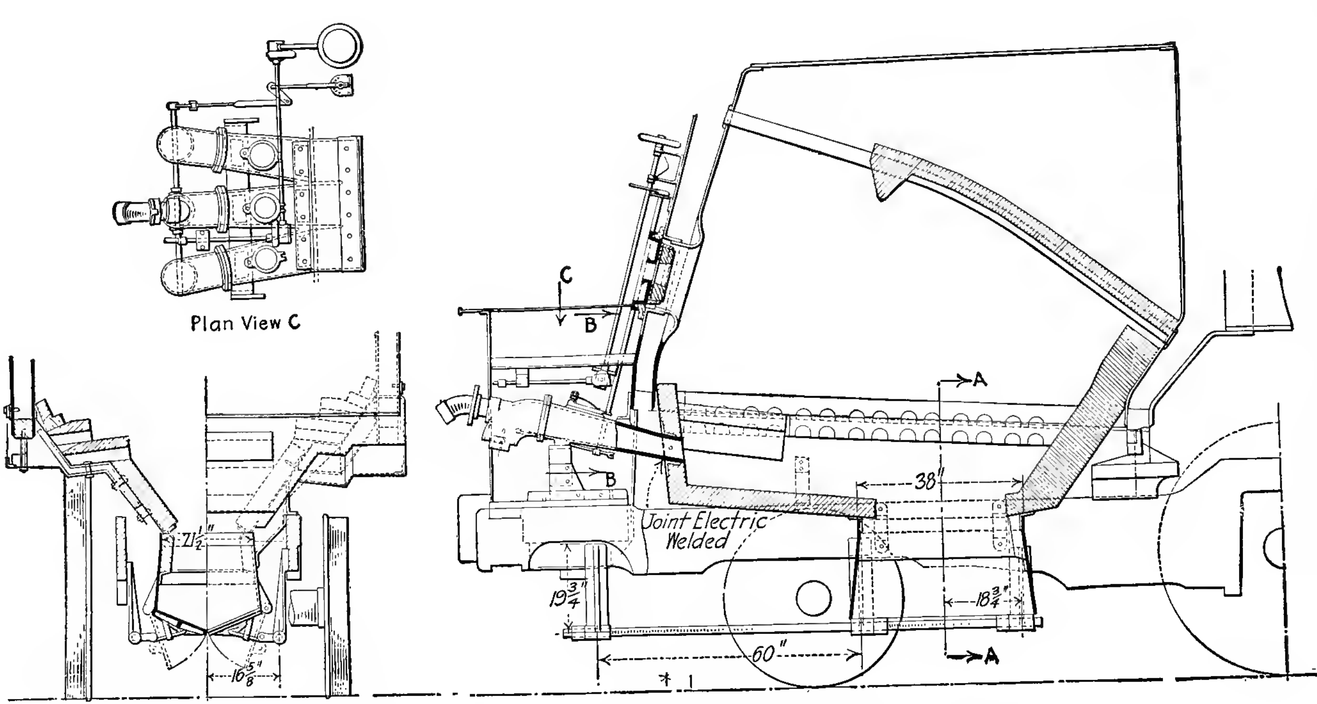

Plan View C

Section A-A Rear View B

FIG. 71.—Triple Burner and Firepan Equipment for Locomotive. A., T. & S. F. Rwy.

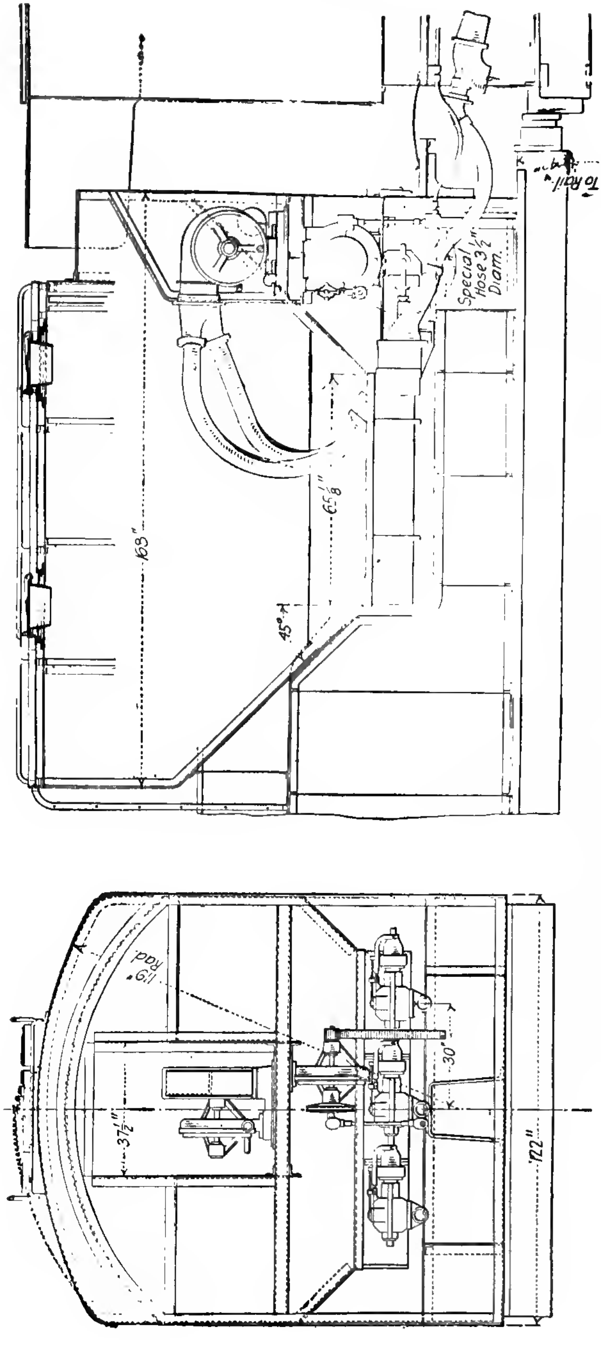

FIG. 72.—Triple Feeder Equipment on Locomotive Fender. A., T. & S. F. Rwy.

of explosions of powdered coal where ordinary sensible precautions are observed. The writer has worked in cement mills, and has burned powdered coal himself, and knows whereof he speaks. In the first place, powdered coal when in storage or in bulk, or while being blown into the furnace, does not explode. It may puff, or flare back slightly, when starting up a fire in a furnace, if there is not enough draft, but even this is preventable. There have been so-called explosions of powdered coal, several of them, but not one person in ten has any idea of what they are like. Several of the large cement companies, including the Atlas, Alpha, Edison, and others, have had explosions, but every one of them to my knowledge has originated in the grinding room where the coal was pulverized. They are sometimes caused by a nail getting in the mill and causing a spark;

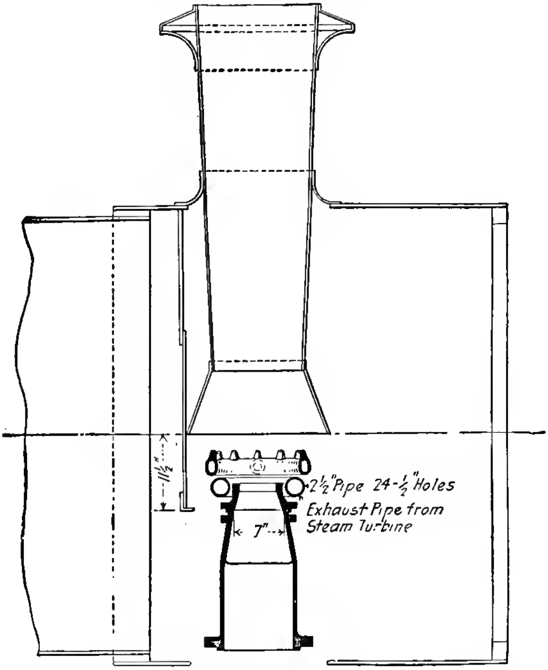

Fig. 73.—Locomotive Front End for Powdered Coal.

and sometimes by the presence of an open flame when cleaning or repairing a mill.

" All of these explosions are caused by impalpably fine dust floating in the air in suspension. This dust floats in layers or strata. Nails and other pieces of iron should be removed by an electro-magnet before the coal goes to the mill, even if only to protect the mill from damage. At a recent explosion (?) in one of the big cement mills the facts were as follows: A foreman and some of his men were repairing and cleaning a mill. One of the men had rammed a piece of waste on the end of a stick into a part he was cleaning and somehow (no one knows how) it caught fire as he pulled it out. Immediately there was a swift hissing sound like a pinwheel going off, or like escaping steam, and in

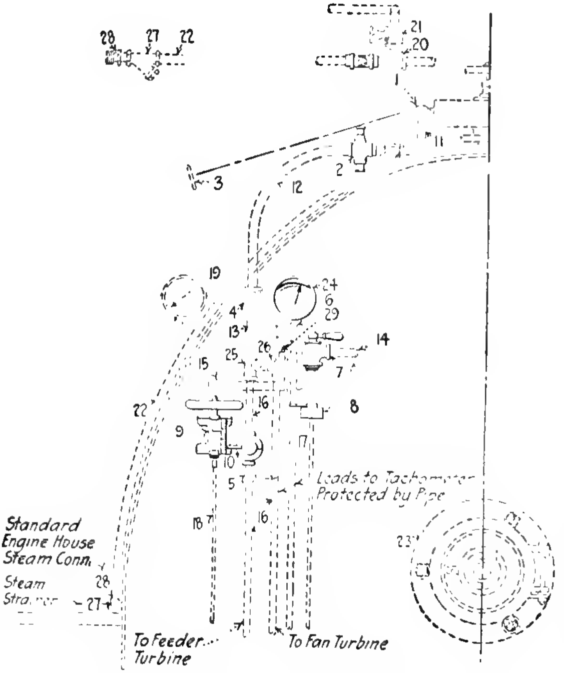

ITEM	NAME
1	1¼" ANGLE VALVE
2	PRESS RED VALVE 1¼" INLET-½" OUTLET
3	EXTENSION HANDLE
4	1½" GLOBE VALVE
5	1"x1"x¼" TEE
6	300 LB DUPLEX GAGE
7	1½" QUICK OPEN BLOWER VALVE
8	DAMPER CONTROLLER VALVE
9	FEEDER CONTROL
10	GRAD PRESS. RED VALVE 1" INLET-1" OUTLET.
11	1¼" DIAM. PIPE
12	½" " "
13	1½" " "
14	1¼" " "
15	1¼" " "
16	1" " "
17	GAGE CONNECTION
18	¾" RCO
19	BOILER GAGE
20	1¼"x1¼"x1¼" TEE
21	1¼" GLOBE VALVE
22	1¼" DIAM PIPE
23	FURNACE DOOR
24	TACHOMETER
25	1½"x1"x1" TEE
26	1 STREET ELL ¼" OUTLET
27	1¼" STEAM STRAINER
28	STD ENG HOUSE STEAM CONNECTION
29	DOUBLE RADIATOR SYPHON AND VALVE

FIG. 74.—Locomotive Cab Equipment for Powdered Coal.

a flash this traveled the length of the room down a stairway, and back several times in layers just like a train of powder, only there was no report, no explosion, just a hissing. The men came out, they were absolutely denuded, yet seemed to retain their faculties. The foreman said "I'm done for and am going to die." He was able to tell what had happened before he became unconscious. They all died shortly afterward.

"As terrible as this seems, it is entirely preventable. I have never seen a cement mill yet where you could go near the pulverizing plant, much less in it, without becoming covered with coal dust. Yet at the American Iron and Steel Manufacturing Co. works at Lebanon, they have used powdered coal for ten years and have never had an explosion. I have stood inside of their grinding room and had a white handkerchief on my sleeve and it caught not a grain of dust.

"Cement mills seem to think that it is cheaper to take chances as long as things keep running rather than to spend enough money for safety. There are two ways to be safe—use a mill that is tight, and spend enough money for competent labor and materials to keep it in repair. As to storage and burning: coal pulverized and stored in tanks is 100 per cent less liable to explosion than oil. It sometimes catches fire from spontaneous combustion or otherwise, and nothing happens any more than what would happen if a pile of slack coal should catch fire. It is not even necessary to shut down. All that is necessary is to keep right on drawing it off in its semi-burnt state, cutting off the supply to the bin that is on fire, and burn it until it is all out of the tank; when a new supply may be put in, if the tank has not become heated. Care must be taken to see that none of the burnt coal remains.

"In a large cement mill, where the writer was employed, it was frequently necessary to walk along the iron gallery in front of the supply bins. This gallery is practically right over the front end of the kilns and only 8 ft. above

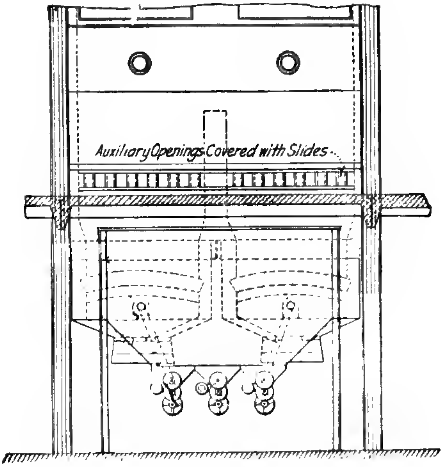

Sectional Elevation
A-A

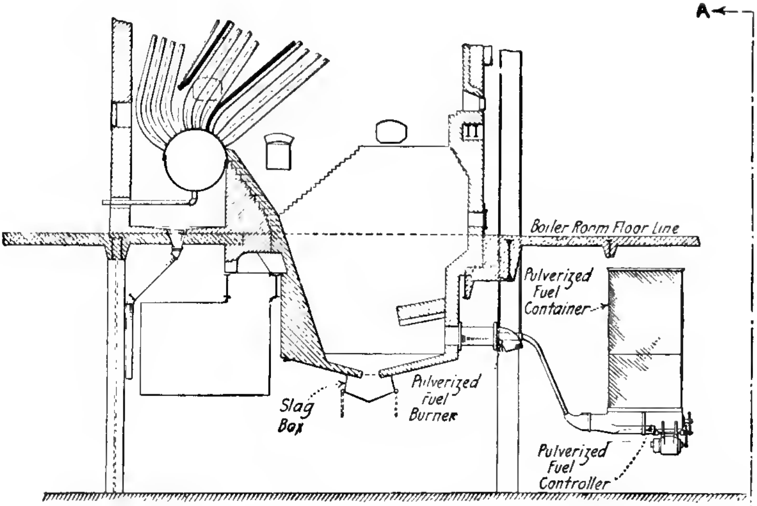

Fig. 75.—Powdered Coal Equipment for Stirling Boiler. The Hudson Coal Co.

them. The coal dust which has overflowed the bins is always from 2 to 4 in. thick on this walk. Even when careful (which no one is) a person kicks showers of this fine dust right down over the open red-hot end of the kilns; it is sometimes kicked down over a new man as a joke. Clouds of this dust drift down over the kilns and are sucked in by the draft. Certainly no severer test than this could be applied.

" Powdered coal is as safe as coal in lumps, if common sense and judgment are exercised, and any one who believes the contrary is laboring under a misunderstanding of the facts in the case.

" Open dryers should not be used, that is dryers in which the heat and flame come in direct contact with the coal. This is dangerous and should not be tolerated, though some concerns practice it. There are plenty of good compartment dryers on the market which are safe."

In 1915 Mr. Thomas A. Edison, in explanation of the so-called explosion that took place in his cement mill some years ago made the following statement: " The explosion was occasioned by fine coal dust catching fire and burning slowly in a pit, thus forming an explosive gas with the air. The explosion killed five men. Please let me emphasize the fact that it was not the dust itself that exploded."

Another view of explosions: " With regard to explosions, powdered coal is much safer than oil or natural gas, as a leak is at once detected by the eye, and the trouble can be remedied immediately. The entire system, from the point where the coal is dried, to the bins at the furnaces, may be entirely enclosed, rendering it absolutely dust-tight. The bins and conveying system contain but a small quantity of air; and an explosion there is absolutely impossible in a well-designed plant."

One large company in the central part of New York State, in stating their experience, say " We never had an explosion from the use of powdered coal and we have made extensive experiments with it. We do not consider

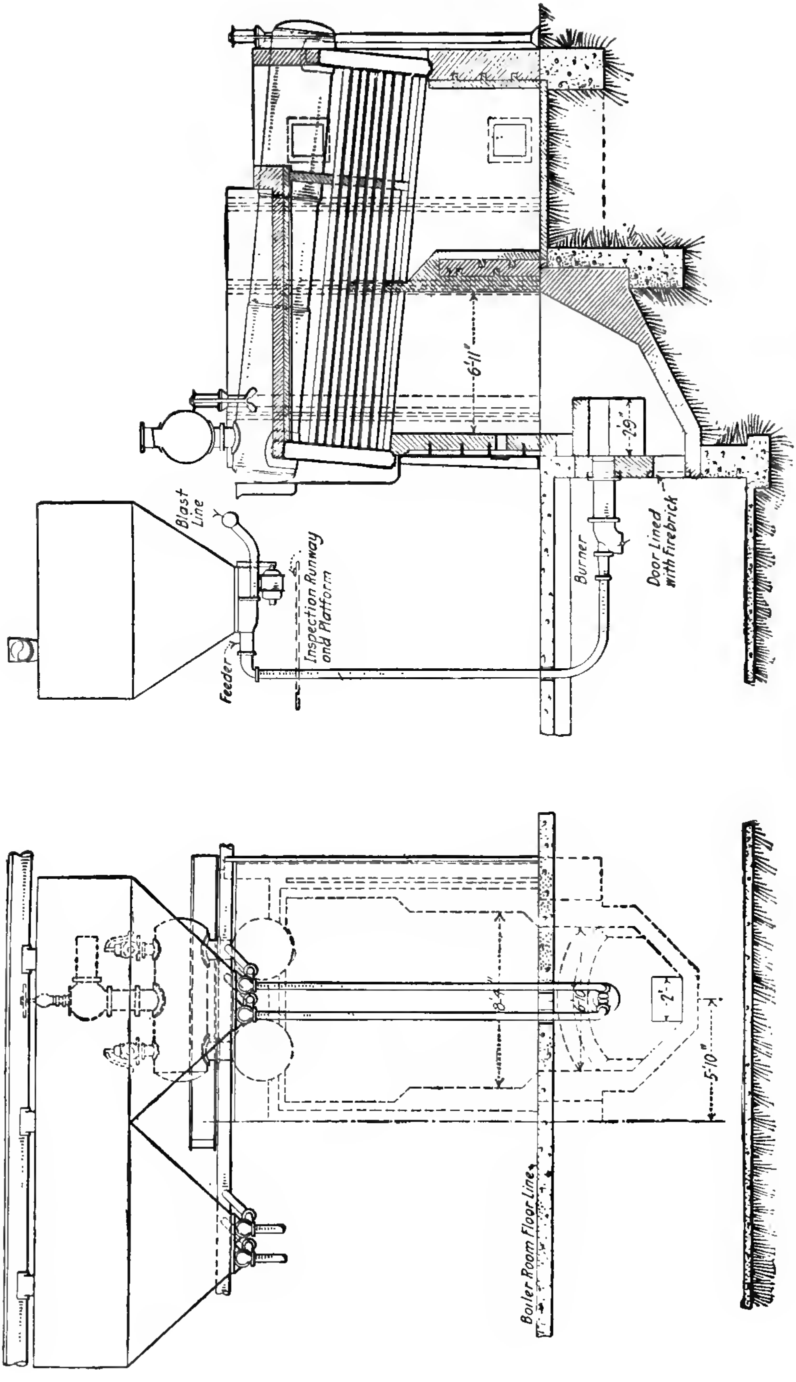

FIG. 76.—Powdered Coal Equipment for O'Brien Boiler. M. K. & T. Rwy.

it advisable to have large quantities of powdered coal lying around."

Storage Difficulties. Storage difficulties should not exist with dry coal. There should be no floating dust in the atmosphere. Moist coal should not be stored as it does not flow freely, but cakes up and gives trouble. Provision should be made for keeping the coal moving, and in case of shut-down of plant, coal should not be left in the storage bins for much over a week. These are the only precautions which it is necessary to take. No trouble is experienced from the storage of coal for short periods of time. It should be given a chance to cool between the pulverizing machine and the storage bin.

The caking of coal dust in separate bins at each furnace was the cause of a fire at the Burden Iron Works about two years ago. The coal persisted in caking and the men were in the habit of using a club to hammer the sides of the bins in order to get the coal dust to flow into the controller, until the point was reached where the bins were getting so damaged that the manager had to forbid hammering. Then one night one of the men, trying to get coal dust, removed the slide at the bottom of the bin between it and the controller, thinking no doubt that the coal would then move more freely, with the result that the coal dust leaked in small particles down on to the floor. There was a strong wind blowing at the time, and just at the moment when the operator was taking out a heat, a puff of wind blew some of the coal dust across the heat with the result that it instantly took fire. The conditions here were ideal for combustion.

It was a coincidence that just above this furnace the shop was divided into two parts, the old one having a roof of wood trusses and the new part one of steel trusses. The flame shot up instantly to the wood trusses and as they were covered with fine particles of powdered coal the fire swept across these trusses and inside of ten minutes the roof was a furnace and the men had to flee for their lives. The fire burned from 10 P.M. to 2 A.M., when the roof all caved in

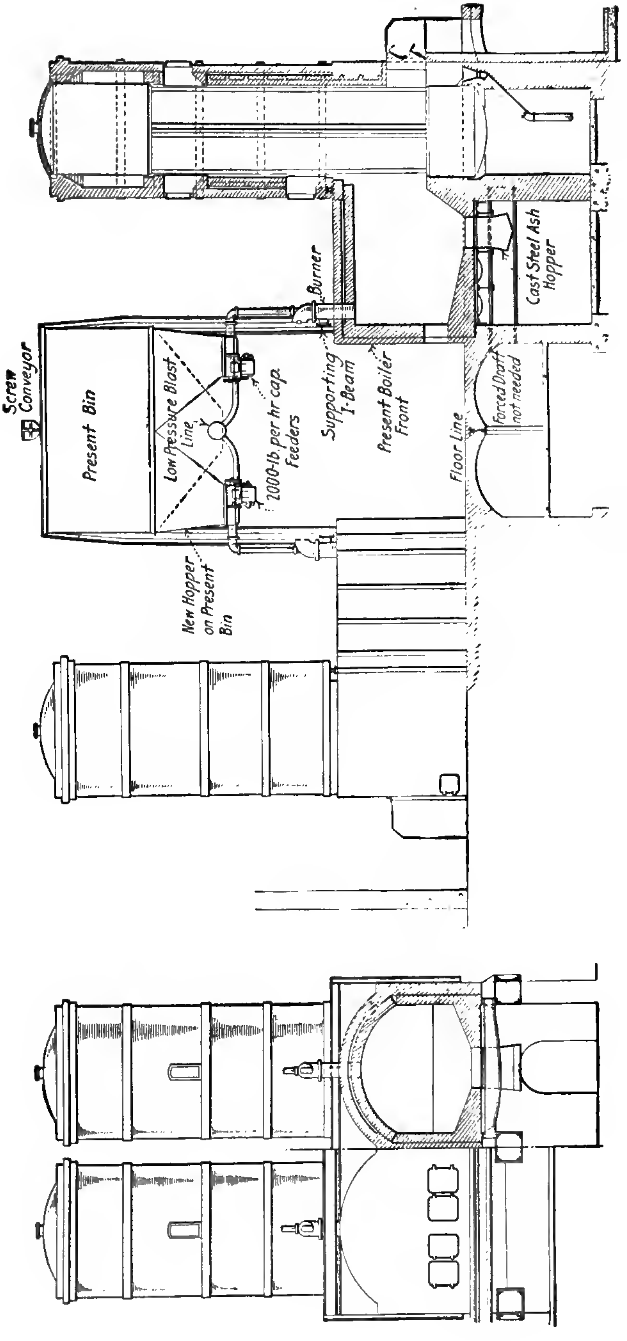

Fig. 77.—Powdered Coal Equipment for Wickes Boiler.

and fell on the furnaces. That part of the building having the steel trusses did not catch fire, thanks to the efforts of the firemen. The measuring hoppers and screw conveyors, with walkways, came down with the roof, but there was no back flash of coal dust through the conveyors, nor was there any explosion of coal dust. It was simply a fire caused by the existence of perfect conditions for combustion.

CHAPTER XI

EFFECTIVE UTILIZATION OF POWDERED COAL IN METALLURGICAL FURNACES

THE need of unreserved efficiency and conservation of resources in our industrial plants was never so urgent as during the past year. With the constant increasing demand for production there existed a pronounced deficiency in practically all supplies required to meet this demand. This was particularly true in the case of fuels so that it was frequently necessary to curtail the quantity delivered to our industries in order that domestic needs might be met. This condition made conservation obligatory and to meet the situation there was an intensified effort by engineers to devise more efficient methods whereby economy of fuel would be obtained.

The savings secured by the substitution of powdered coal, for other fuels, in many of the large metal working plants, have been most encouraging and it is the intention of this chapter to show the basis on which these savings have been determined and to give figures relative to the fuel conserved.

Whatever the fuel may be it is the cost of heating per unit of output that concerns the heads of our manufacturing plants as this is the index showing the loss or saving.

Entering into this cost are the following factors:

(*a*) The cost of raw fuel per unit of output.
(*b*) The unit output of furnace.
(*c*) Cost of furnace repairs per unit of output.
(*d*) Cost of handling fuel and "stack" per unit of output, viz., labor cost.

(*e*) Continuity of operation of furnace.
(*f*) Satisfactory working conditions at furnace from the standpoint of the operator.

As effecting cost, any one of the above six factors may be the deciding one either for success or failure as judged by the balance sheet.

A little consideration will show what a great bearing the particular fuel has on each one of these items.

A comparison between powdered coal at $4.90 a ton, fuel oil at $.09 a gallon and natural gas at $.35 per 1000 cubic feet, gives a B.T.U. cost per one cent as follows:

Powdered Coal	55,102	B.T.U.	
Fuel Oil	14,777	"	low
Natural Gas	38,570	"	high

The figure $4.90 for coal per ton includes the cost of preparing coal and delivery of same to the burners using the Holbeck System of pneumatic distribution. This comparison shows a material saving in favor of powdered coal.

The output of any furnace is dependent on:

(*a*) The maintenance of sufficient furnace temperature.
(*b*) The furnace design.
(*c*) The human factor.

To maintain a temperature as required by the particular heating process necessitates that the proper amount of heat be generated. The quantity of fuel needed to generate this heat will depend on the degree of approach to perfect combustion. The design of the furnace will determine the efficiency of application of this heat to the "stack" and hence, in a large measure, the amount of fuel. Unless a furnace is handled intelligently, there will be a waste of fuel; and the output, other factors being constant, will be in direct ratio to the intelligence shown. Overheated "stack" means a loss of heat and of course a poorer quality of material.

The use of powdered coal has invariably given an increased production as compared with that obtained from the fuel supplanted where the furnace design has been correct. This has been largely due to the fact that powdered coal of all the fuels, affords the best opportunity by which to obtain the perfect combination of air and fuel which produces the highest degree of perfect combustion. Where failure has resulted, it has been caused, in a majority of cases, by applications to furnaces built for other fuels, and not altered, or in furnaces designed with insufficient knowledge of the characteristics of powdered coal in burning.

The third factor—cost of repairs—is largely governed by furnace design and this has a greater influence on the life of the refractories than the fuel. If the furnace is properly constructed there will be no increase in this cost when using powdered coal. With certain coals, especially those containing a high percentage of ash, there will be some clogging of any small passages but this can be overcome by conveniently locating "clean-out" openings and by correct draft conditions. The low fusing point of the ash of some coals naturally will give them a greater tendency to adhere to any surface with which they come in contact, but, as a rule this deposit can easily be removed, if provision is made to make these surfaces accessible.

The labor cost connected with the handling and preparing of coal will include the drying, pulverizing and conveying to the burners, but in almost all cases this cost is lower than the cost of delivering coal by hand or power to hand fired furnaces and lower than the cost of pumping and feeding fuel oil to furnace.

ANNEALING FURNACES

In the malleable iron foundry there are two processes which require for their fulfillment the generation of a large quantity of heat. These are the melting of the pig iron and scrap and the annealing of castings. The usual furnace efficiency in both cases is low, and there is thus afforded an opportunity to effect a very considerable reduction in the fuel consumption. This has been accomplished in the annealing furnaces by using powdered coal as a fuel.

There are, at the present time, some fifteen (15) to twenty (20) malleable foundries burning powdered coal in annealing furnaces with satisfactory results.

This fuel was first applied at the plant of the Erie Malleable Co., Erie, Pa. The credit for the success of this installation belongs to B. J. Walker, who in 1896 operated annealing furnaces in which the source of heat was powdered coal. Other companies who appreciated the worth of this fuel and whose installations closely followed that of the Erie Malleable Co., were the International Harvester Co. and the Symington Company of Rochester, N. Y. A recent installation is that of the Pressed Steel Car Company at McKees Rocks, formerly known as the Pennsylvania Malleable Company.

The Pressed Steel Car Co. made its initial application of powdered coal to annealing furnaces in the fall of 1917 and up to the present time have been in continuous operation. In this plant the furnaces are practically all below floor level with the roof formed by bungs.

There are ten (10) large and eighteen (18) small furnaces, some of which are used for annealing steel castings. The larger ones have a capacity of 50 tons, while the smaller hold 25 tons.

Fig. 78 shows the longitudinal cross-section of the large furnace and Fig. 79 a transverse section.

As is well known the requisites in an annealing furnace from a thermal standpoint are a uniform temperature throughout the heating chamber and the maintenance of steady heat for the proper length of time. To secure these conditions, it was necessary to install four burners in each furnace and maintain a steady flow of coal to these burners.

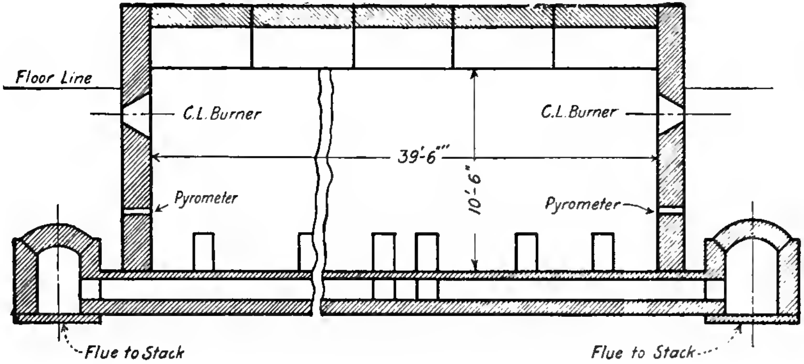

Fig. 78.—Longitudinal Section of Annealing Furnace, Pressed Steel.

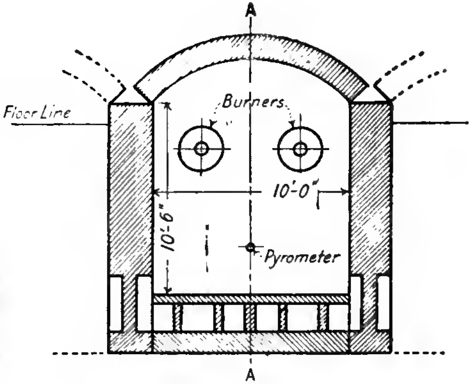

Fig. 79.—Transfer Section of above Furnace.

The following table shows a typical run and illustrates how well the conditions demanded have been met:

July			
10	Noon, furnace lighted		
11	1600° (6 A.M.)	1640° (Noon)	1630° (6 P.M.)
11–12	1620° (9 P.M.)	1620° (Mid.)	1640° (3 A.M.)
12	1640° (6 A.M.)	1620° (Noon)	1620° (6 P.M.)
12–13	1640° (9 P.M.)	1600° (Mid.)	1610° (3 A.M.)
13	1620° (6 A.M.)	1640° (Noon)	1600° (6 P.M.)
13–14	1640° (9 P.M.)	1620° (Mid.)	1630° (3 A.M.)
14	1640° (6 A.M.)	1620° (Noon)	1620° (6 P.M.)
14–15	1640° (9 P.M.)	1630° (Mid.)	1600° (3 A.M.)
15	1620° (6 A.M.)	1620° (Noon)	1640° (6 P.M.)
15–16	1620° (9 P.M.)	1610° (Mid.)	1640° (3 A.M.)
16	1620° (6 A.M.)		

From the foregoing we obtain the following summary:

Furnace lighted July 10, noon.

Time to bring furnace to 1600° temperature, eighteen hours.

Furnace held at 1600°—one hundred twenty hours (extreme variation, 1600° – 1640°).

Firing discontinued 6 A.M. July 16th.

Bungs (roof) removed 6 A.M. July 18th.

The castings were then removed as soon as they were cool enough to handle.

A pyrometer is inserted in each end of each furnace. Each one is connected to a central recording instrument. It is the duty of the furnace attendant to read the temperature of each furnace at frequent intervals on this instrument so that there is little chance for any wide fluctuation in temperature. One attendant supervises all the furnaces.

With powdered coal it requires from 14 to 18 hours to bring the furnace to 1600°; with fuel oil the time is 22 to 24 hours and with natural gas about 26 hours. From the foregoing it seems apparent that powdered coal gives results which are thermally satisfactory.

There is an accumulation of fine ash which must be removed from these furnaces at intervals. The length of these intervals will depend on the percentage of ash in the coal. When the coal has a low ash content the accumulation is removed once a month. In the standard type of furnace where the heating chamber floor level is at general floor level the disposal of the ash is of small moment due to the great accessibility of both heating chamber and flues.

As is well known, in annealing malleable castings a fluctuating temperature must be avoided and at no time is it permissible to allow the temperature to fall below the critical range. To secure this control of the heat requires close regulation of both the fuel and the air to burn it. No trouble has been encountered in holding these conditions constant.

A comparative record of costs for three fuels is as follows:

Natural Gas	14,000,000 cu. ft.	@ $.35 per M	$4900
Fuel Oil	105,000 gals.	@ .05 per gal.	5250
Powdered Coal	525 tons	@ 5.00 per ton	2625

The figure, $5.00, given as the cost of powdered coal includes, beside the cost of coal, all labor, power and maintenance charges. These costs are taken from actual practice and cover three separate months during each of which one of these fuels was used.

In another malleable iron foundry where powdered coal was burned in the annealing furnaces, a saving of 50 to 60 per cent has been effected in the quantity of fuel consumed. In this case the amount of powdered coal burned per ton of castings is 450 pounds. The time to bring the furnace to temperature has been reduced from 24 to 36 hours required for hand firing, to 11 to 14 hours. When hand fired there was always a difference in temperature in these furnaces of from 200 to 300 degrees between the front and rear. To-day, when fired with powdered coal, this temperature is uniform. This is accounted for by the fact that the pressure in the furnace is equalized. It is impossible to obtain a uniform temperature throughout the chamber unless the furnace is under a slight pressure. With stack draft and hand firing it is exceedingly difficult to avoid pulling in some cold air, especially at the door, this making a cold streak and naturally it is impossible to secure a uniform temperature under such conditions.

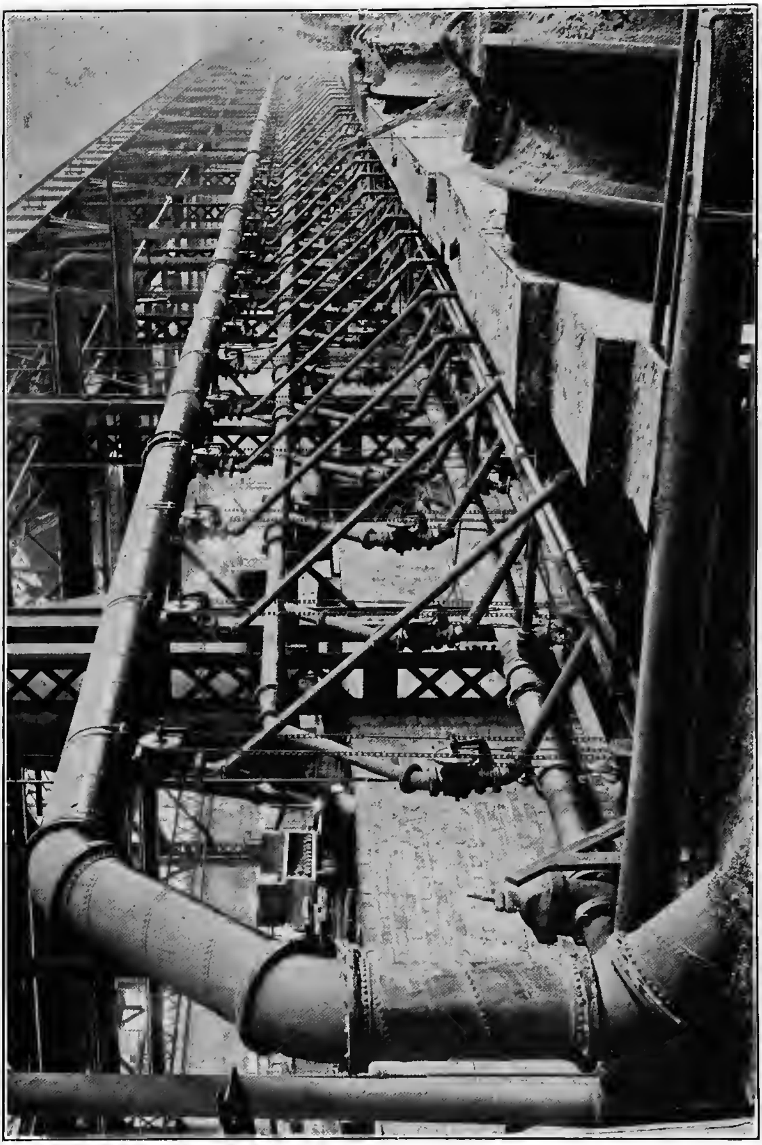

FIG. 80.—Pressed Steel Annealing Furnace.

Fig. 81.—Cannonsburg Annealing Furnaces, Row of 18.

Fig. 82.—Cannonsburg Annealing Furnaces, Open door.

Fig. 80 shows the top of the furnaces and the pipes through which the coal and air are delivered to the burners. The large spiral riveted pipe on top carries the coal, while the secondary air flows through the lower one. From both of these mains 2-in. wrought iron pipes are branched. The latter are connected at their upper ends to the control valves, shown in the illustration, which regulate the flow of coal and air to the burners. Their lower ends terminate at the burner.

Fig. 81 shows a view of the 18 annealing furnaces for blue and white annealing in a tin plate mill.

Fig. 82 is a view through the open door of the sheet annealing furnace just before unloading the furnace.

SAVINGS EFFECTED BY USING PULVERIZED COAL IN ANNEALING FURNACES

Located in the vicinity of the City of Pittsburg is a plant using bituminous coal, hand fired, in annealing furnaces for black sheets.

The tonnage per month of 26 days, 24 hours per day, is 5000 tons, using 325 lbs. of coal per ton of sheets in twenty (20) furnaces.

The labor connected with the above work is as follows:

Labor:

$0.30 a ton to unload coal.
10 firemen for 24 hours @ $0.36½ per hour.
2 ash wheelers, each 10 hours @ $0.30 per hour.
Mule cart driver, $6.00 per day for hauling ashes.
Freight on ashes, $0.29 net ton plus 3 per cent war tax, coal averaging 10 per cent ash.

$$\frac{5000 \times 325}{2000} = 813 \text{ tons of coal used}$$

813 tons @ $3.00		$2439.00
813×$0.30	$243.90	
10×24×$0.36½×26	2277.60	
2×10×$0.30×26	156.00	
$6.00×26	156.00	
81×$0.29 plus 3 per cent	24.20	2857.70
Total cost of fuel and labor		$5296.70

This amount divided by 5000 tons makes a charge of $1.059 per ton of annealed sheets for coal and labor.

With powdered coal the charge per ton would be as follows:

Coal:	
$\frac{5000\times 200}{2000}=500$ tons.	
500 tons @ $3.00	$1500.00
Labor:	
1 man in powdered coal plant @ $5.00×two turns×26	260.00
1 assistant @ $3.65×two turns×26	189.80
Power:	
500 tons×30 K.W.H.×$.01	150.00
Total cost for coal and labor	$2099.80

This amount, divided by 5000 tons (the amount of tonnage, makes a charge of $.419 per ton of annealed sheets and this difference represents a saving of $3200 per month and $38,400 saved per year by using powdered coal as a fuel instead of hand firing.

In addition to the above saving, there would be the reduction of scaling upon the annealing boxes; and, a more uniform temperature being obtained, the percentage of wasters will be considerably reduced.

In one plant using powdered coal they get 45 to 50 runs with their pots.

AIR FURNACE

In this class of work (the melting of iron and steel for castings in malleable and steel foundries), powdered coal has not to date made any great strides. The reason for this is not known. However, in the next two years there is no doubt that powdered coal firing on these furnaces will be as general as on annealing work.

The following information from one of the few plants which is burning powdered coal in air furnaces is interesting:

"Have made nine (9) heats on air furnaces, every one of which has been a complete success, both as to operation and as to quality of metal. The furnace was not designed especially for powdered coal and follows the lines of an ordinary air furnace. It has a capacity of twenty (20) tons and on powdered coal is tapped in four hours and forty-five minutes after charging. Hand fired, this same furnace required six hours from charging to tapping."

In this plant they have three air furnaces, two of which are hand fired. These are sixteen (16) ton capacity. They require five men to two furnaces, hand firing. Using powdered coal they will only need two men. Their coal ratio to output is on hand firing about one to three, while when using powdered coal they feel confident they can get one to five ratio or four hundred pounds of coal to two thousand pounds of output. The metal is better in quality when powdered coal is used and there is no oxidizing. They must maintain a reducing atmosphere in the furnace at all times and this they can easily do. The saving on brick work, they estimate, will be 50 per cent. The "bungs" will probably give a life of from sixty to seventy heats. They admit an additional air supply over the bridge wall, the same as for hand firing. To do this they use four pipes about four inches in diameter. The distance from the inside of burner to the bridge wall is about nine (9) feet. Formerly, it was less, but they had to reduce the gas velocity over the metal and hence lengthened this distance. They have absolutely no trouble from ash covering the lath and have not had since starting. The man who fired a hand fired furnace came out at 4:30 A.M. while on powdered coal he comes out at 7:00 A.M.

ANODE FURNACES

The anode furnaces which take blister copper from the smelters and partially refine it, before casting it into anodes for electrolytic refining have found it possible to operate successfully with powdered coal for some time. The fuel consumption has proven to be 175 pounds of coal per ton of copper refined.

CORE OVENS

The results that were being obtained in a steel foundry by using fuel oil were not entirely satisfactory in that the moulds were not sufficiently free from moisture and that there was a deposit of grease on the surface of the sand.

An experimental powdered coal plant was installed to relieve these conditions and to reduce the cost of drying, in that a less expensive fuel would be used and the time required in completing a cycle would be shortened.

The maximum temperature permissible in the drying oven is so low that any unconsumed carbon entering into the combustion chamber would be deposited as soot on the cores.

These conditions, therefore, required that the combustion chamber be so designed that all the combustibles in the fuel be consumed in its passage through and that a low velocity be maintained in order that the ash be deposited before entering the drying compartment.

Fig. 83 shows the core oven furnace as constructed for fuel oil. The first test was made by installing a powdered coal burner so as to eject the coal horizontally into the center of the combustion chamber. The difficulty experienced in this design was in bringing the temperature of the combustion chamber up to the ignition point of coal and for some time it was found necessary to maintain a pilot of flame of gas or oil.

Under the above conditions the consumption of the combustibles was not complete and a heavy coating of soot would have been deposited on the moulds. From these results it appeared that the combustion chamber was too wide, and this was changed for the second experiment.

Fig. 84 shows how a section of the combustion chamber was altered by placing two four-inch walls about fourteen inches apart for a length of thirty-six inches and running them up about six inches above the center of the burner.

The result obtained in this experiment showed improvement in lighting, but this advantage was not sufficient.

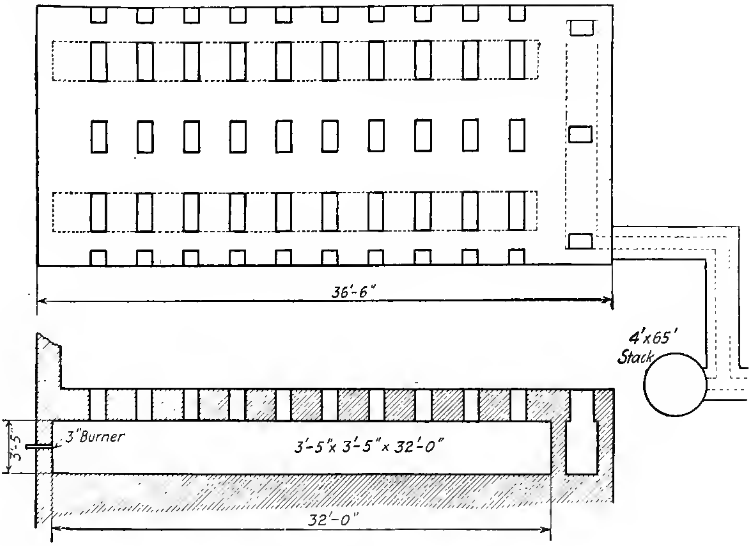

FIG. 83.—Core Oven Furnace.

Following the above line of reasoning, an attempt was made to extend the advantages brought out in the previous test. The inner-combustion chamber was increased in length to twenty-two feet, and the roof housed over for a distance of three feet from the burner.

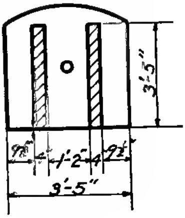

FIG. 84.—Core Oven Furnace.

After a short test on an empty furnace it was decided to run a charge. The required temperature was maintained until the drying was complete, and upon examination it was found that the moulds were covered with $\frac{3}{32}$ in. of black dust.

The above result caused a radical change and an attempt was made to prevent the ash from entering the drying compartment by impinging the flame in a confined chamber; the temperature of which would slag all the ash as it entered (Fig. 85).

The result was the slagging of the ash and this slagging was confined to the chamber; but it was found that this limited the temperature to 450° F.

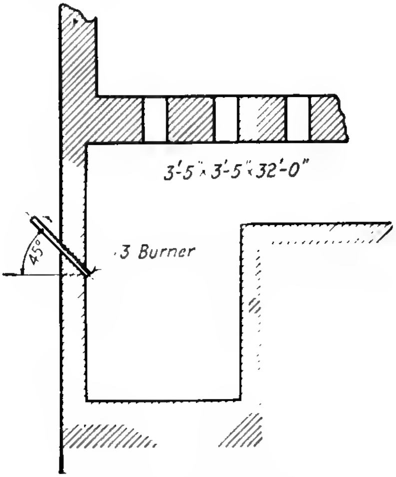

Fig. 85.—Core Oven Furnace.

It was then decided to free the moulds from any deposit by by-passing the smoke caused when first lighting up.

The temperature of the combustion chamber was raised to the point where all coal was consumed, afterwards allowing the heat and flame to pass into the furnace proper. This was accomplished by adding a second flue at the rear of the furnace, and by means of dampers arranging for the travel of the gases.

Before the dampers were reversed, that is, when the gases were passing directly into the stack, the combustion was practically complete, but when the reversal of dampers was made the rear flue retarded the flow, the draft being weak and the gases coming into contact with a cool furnace so that a deposit of soot resulted.

The above experiment proved that by-passing was not successful and that some means must be found to consume all of the coal in the combustion chamber. To accomplish this, ignition walls were placed in the small combustion chamber as shown in Fig. 86.

This helped some, but moulds were found to be still coated. By further lengthening this chamber to ten feet a decided improvement resulted, but even this was not entirely satisfactory.

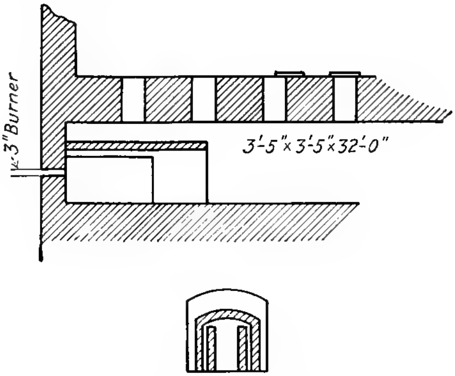

Fig. 86.—Core Oven Furnace.

Again the chamber was lengthened to sixteen (16) feet. The change then made proved satisfactory, there being a deposit of only $\frac{1}{16}$ in. of ash, all other conditions being excellent.

At this time an analysis was made to determine the mount of ash in the coal used, and the percentage of combustible in the ash that remained on the moulds.

The results of this analysis showed 10 per cent of ash in the coal and slightly over 1 per cent of combustible remaining in the ash.

On July 29th a test was started with a view of running for a week continuously, but on account of a small combustion chamber having been built, with only a 4-in. arch for the temporary experiment, the arch gave way, necessitating the rebuilding of the combustion chamber.

On August 5th a test was made with good results, except that too much coal was used, the thermo-couple having a loose connection and, therefore, registering temperature incorrectly. Furnace operated from 9:00 P.M. August 5th to 9:00 A.M. August 6th, using 5500 pounds of coal. Moulds were found to be dry with only a slight coating of white ash.

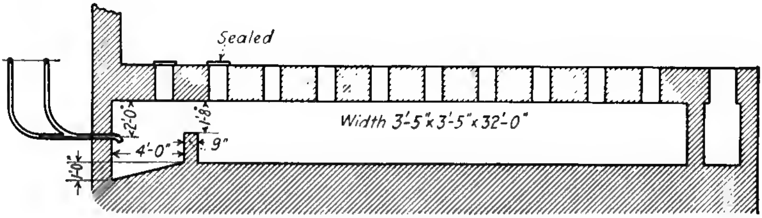

FIG. 87.—Core Oven Furnace.

Furnace was again operated from 6:00 P.M. August 6th until 6:00 A.M. August 7th, with good results, the thermo-couple having been repaired. It was found that 3800 pounds of coal were used. Condition of moulds the same.

Fig. 87 shows the section of the core oven as again changed in order to confine the heat and raise the temperature in the combustion chamber. The area of the burner discharge was increased so that the fuel was discharged into the furnace under a lower velocity. This afforded a better opportunity to consume all of the combustibles.

The results obtained in this test were entirely satisfactory. There was only a slight deposit of gray ash in the dry chamber. The fuel consumption was 2600 pounds coal per charge.

CONTINUOUS HEATING

A sectional view of a continuous billet, ingot or bloom furnace which has been in successful operation on powdered coal for over three years is shown in Fig. 88.

This furnace was formerly operated with producer gas and required 225 to 250 pounds of coal as fired into the producer to heat one ton of steel.

On powdered coal this type of furnace (of which there are three in operation) did as follows:

One blooming mill furnace on blooms 8″×8″×10′ long, heated 340 tons of steel in 12 hours, charging hot.

Another blooming mill urnace on 8″×8″×10′ blooms heats 217 tons of steel in 12 hours, charging cold.

One billet furnace on 4″×4″×55″ billets, heats 100 tons in 12 hours, charging cold.

The total tonnage as outlined above is (charging cold on three furnaces) 534 tons of steel in 12 hours and the records of the pulverized coal plant show that during these 12 hours there was delivered a total of 25 tons of coal to the three furnaces, which is equivalent to a little less than 100 pounds of coal per ton of steel heated.

These furnaces are operated continuously for one week, when they are closed down and the ashes cleaned out of smoke flue. The repairs of the brick work have been reduced to less than one half those with producer gas.

Each of the above furnaces is equipped with six 4-in. inclined water-cooled burners.

ANALYSIS OF COAL AND ASH FROM A CONTINUOUS FURNACE

	Moisture.	Volatile Matter.	Ash.
Coal.	1.33	37.58	16.09
Ash.	.11	1.07	98.93

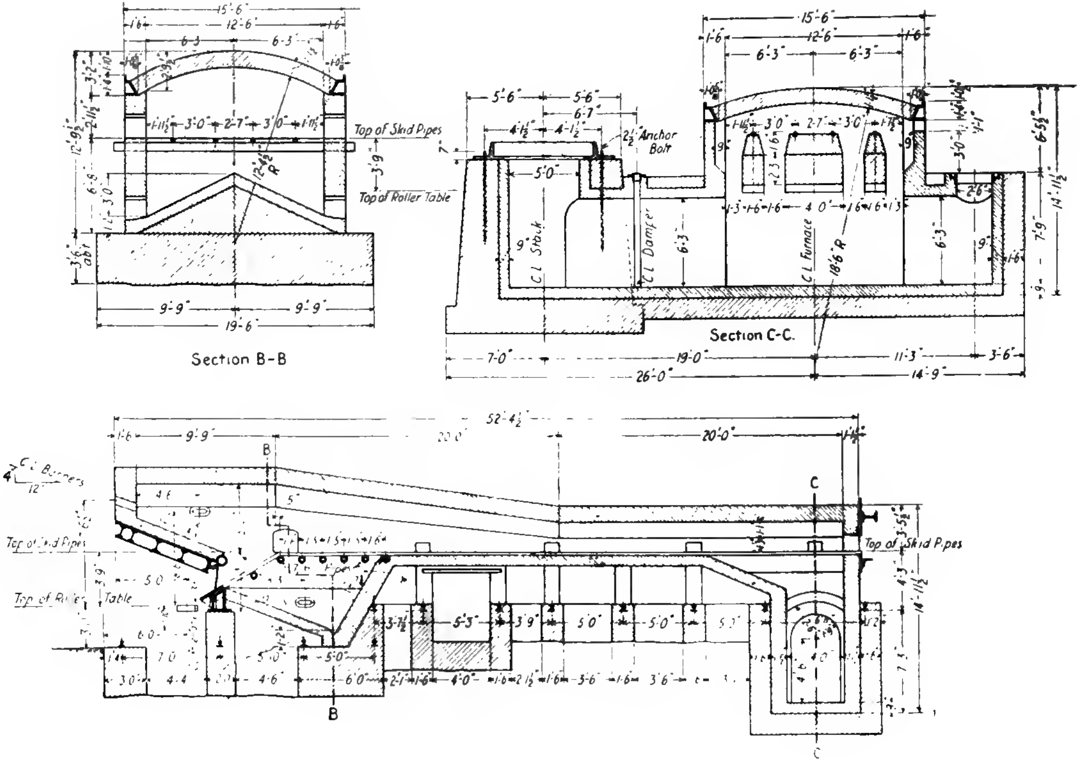

FIG. 88.—Bethlehem Steel Continuous Furnace.

CAR WHEEL FURNACES

Fig. 89 shows a three-door heating furnace used for heating car wheel disks before being turned.

Above this furnace there will be observed a waste heat boiler. This boiler is a 250 h.p. Goldie and McUlloch Water Tube Boiler. An evaporation test was made on this waste heat boiler with the following results:

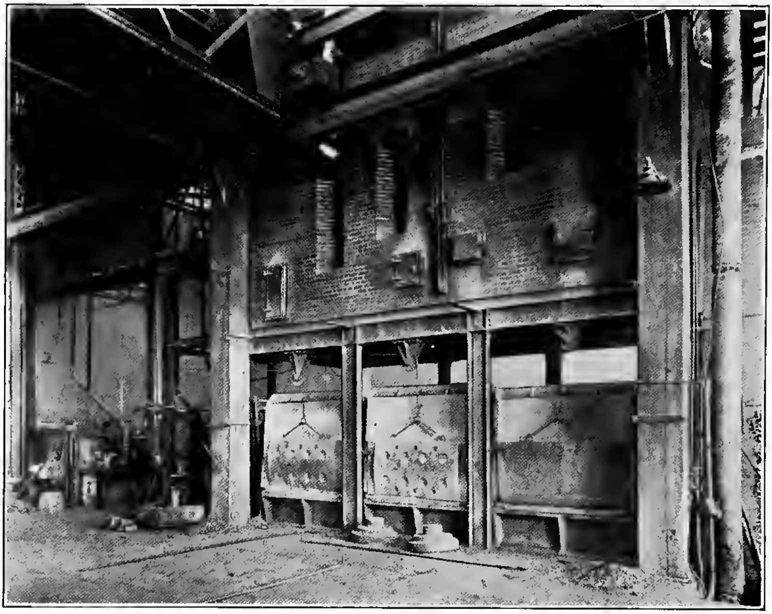

Fig. 89.—Three-door Heating Furnace.

Test started January 15th, 1919

Duration of test	12 hours.
Water evaporated	734,400 lbs.
H.P. of boiler	102
Feed water temperature	175° F.

The above test covers a twelve hour turn from 6 A.M. to 6 P.M., the stack draft being checked a large percentage of the time, and without using any additional powdered coal burners, except those for heating the furnace. The furnace had two burners and consumed about 700 lb. of coal per hour.

The steel is being heated in this furnace for approximately 254 lbs. per ton, the metal being charged hot from the continuous furnace.

LIME KILNS

The Fuller Engineering Company during the late war designed and put in operation the Pulverized Coal Firing System on the lime kilns for the Muscle Shoals Air Nitrate Plant.

The description which follows was published in "Rock Products" of July, 1919.

"The limestone is brought by rail in standard gauge equipment to track hoppers and then elevated to reinforced-concrete bins feeding the kilns. From the seven compartments of this bin, each compartment holding 250 tons, the kilns are fed as follows:

"A by-pass for dust and fine material is provided in the spouts feeding the kilns. The dust thus removed is taken away by a screw conveyor in the floor in front of kilns to an enclosed elevator and conveyor which discharges it at the farther end of the building near the finished lime outlet. Another belt conveyor discharges the dust into a railway car.

"The crushed stone is fed from the bins to the kilns through 10-in. asbestos-protected cast-iron spouts. Control of the amount of stone fed to the kilns is by means of 12×12 in. cradle segmental feeders, which are operated by a rope drive from the kiln driving shaft.

"The feed passing through these cradles depends, of course, upon the angle of repose of the crushed stone and the number of dumps or oscillations to the cradle per minute. The weight of the stone dumped each time can be varied over a wide range by an easy adjustment of the eccentric which moves the cradle feeder back and forth. The number of dumps or oscillations per minute of course depends on the number of revolutions of the kiln per minute, the driving shafts of all being the same.

"The kilns are 125 ft. long by 8 ft. in diameter. There are seven kilns in parallel. The slope of the kilns is ½ in. to the foot. The kiln lining is 9 in. thick for the first 46 ft. and 6 in. thick for the remaining 79 ft. from the fired end of the kiln.

"Each kiln is belt driven from a 30 h.p. variable speed electric motor. The motors were originally housed as protection against the weather, as at that time the building had not been entirely enclosed. The kilns were operated at a speed of one revolution per 1½ to 2 minutes.

"The kiln stack chambers are of the usual type with baffle walls. The steel stacks are 6 ft. in diameter and 100 ft. high above the stack chambers. The removal of stack dust is provided for by hoppered bottoms in the stacks and doors.

"The hot lime discharged from the kiln passes through the cooler stack chamber and enters a cast-iron chute feeding a rotary cooler 5 ft. in diameter and 50 ft. long. The coolers are set on a slope to the horizontal of ⅝ in. to the foot. The coolers are provided with stacks 3 ft. in diameter and 60 ft. high, placed at the feed end of the cooler. The hot lime is discharged into a spout so arranged that the lime may be taken away by either of the two parallel pan conveyors that are provided to take the output of the seven kilns.

"The pan conveyors take the hot lime to the pit of an enclosed bucket elevator, which discharges to a system of belt conveyors, which in turn carry the lime over a bridge, into an adjoining building, where the lime is mixed with coke and is passed on to the electric furnaces where the calcium carbide is made.

"The kiln building is 240 ft. long by 200 ft. in width. It has a structural steel frame and is enclosed with corrugated sheeting. Under the same roof is the coal drying and pulverizing machinery. Thus both raw materials are fed from the same end of the building and from the same in-bound railway tracks.

"One of the most interesting features of the kiln plant is the machinery and arrangement for firing the kilns.

"The fuel used is pulverized coal, which is prepared in a separate building and then conveyed to the kiln building and deposited in pulverized coal bins, one being provided for each kiln.

"The coal to be pulverized is brought in in bottom-dumping railway cars and dumped into a track hopper in front of coal drying building. It passes from the hopper to a 30-in. belt conveyor, then through a 24″×24″ single roll coal crusher which reduces it to 1 in. in size. This crusher is driven by a direct connected 25 h.p. electric motor. The head pulley of the belt conveyor is a magnetic separator, for the purpose of removing tramp iron from the coal before it reaches the crusher.

"On leaving the crusher the coal is discharged into a bucket elevator which feeds the dryer storage bin. The wet coal from this bin is fed to a 4 ft. 6 in. by 42 ft. rotary dryer. The coal enters the feed end of the dryer through a cast-iron feed spout and the coal is fed to dryer by means of a cradle feeder.

"The dryer is so arranged that the combustion takes place around the outside of the shell, the hot gases then passing through a flue and then through the interior of the shell without any flame coming in contact with the drying coal. A steel plate exhaust fan is connected to the dryer. The dust which is carried by the gases passing through the exhaust fan is collected by connecting the exhauster to a 104″ diameter dust collector.

"The coal discharged by the dryer is delivered to four bins over the pulverizers in the milling department. These bins and also the dry coal and pulverized coal elevators are fitted with 12″ vent stacks to avoid the danger of explosions.

"The dried coal is pulverized to a fineness such that at least 95 per cent will pass through a 100 mesh screen. Four 42″ mills, each driven by a 75 h.p. vertical motor do the pulverizing. Each mill gives a capacity of over 5 tons per hour with a fineness running around 97 per cent through a 100 mesh.

"The pulverized coal from the mills is discharged into a screw conveyor built into the floor. The conveyor taking the discharge of the mills is connected to an 88″ dust collector so arranged that the dust carried along with the air is discharged back to the conveyor. The pulverized coal conveyor delivers into a bucket elevator discharging into the screw conveyor which connects the coal mill and kiln buildings. This screw conveyor discharges into seven bins for pulverized coal in the kiln building.

"To each of these coal bins a pulverized coal feeder is connected. The feeder is driven by a 2 h.p. variable speed motor, thus putting the quantity of coal used under the constant control of the operator. The coal passing through this feeder falls through a short vertical pipe into the path of the air being blown through a burner feed pipe. The air is furnished by a pressure blower connected directly to the coal burner feed pipe, which is capable of delivering about 2200 cu. ft. per minute at a 5 oz. pressure when running at 1800 r.p.m. The quantity of air from the blower passing through the feed pipe may be controlled by means of a slide provided for that purpose. The quantity of induced air is controlled by means of a cone on a sliding sleeve set a little back of the point where the coal enters the burner pipe."

OPERATING EXPERIENCE

Unfortunately, for the most valuable results to American lime manufacturers, this plant was not operated long enough to thoroughly test it out. However, the following interesting data were furnished by G. E. Cox of the American Cyanamid Co., Niagara Falls, Ont., who had charge of operation of the lime plant as long as it was operated.

The kilns were designed for a capacity of 100 tons of lime per day of twenty-four hours. While seven kilns were provided, it was intended to operate only five of them at a time, the two others being held in reserve.

The usual difficulty in attempting to burn fine stone in a rotary kiln was experienced. Mr. Cox states: "In regard to the travel of fine crushed stone through the kilns, it is important that the difference between the large and small size be as little as possible so there will be no material separation of the fines and coarse through the kiln. If there is much very fine stone the large stone will revolve around the fine stone entraining the fines and consequently the fines will come out unburned. With reaonable care in crushing, however, this difficulty will be avoided and all the stone will come out well burned. The size stone used in these kilns was that passing through 2½-in. ring and over ½-in. ring. In regard to the fineness of stone that it is feasible to burn in a rotary kiln, fineness makes no difference as in case all the stone is reduced to a reasonably uniform small size, the stone will be thoroughly burned. The important feature is to see that the range of the size of stone is reasonable, such as that described above. In case of a wide range the coarse stone will rotate around the fines, allowing much fine material to come out unburned.

"The unburned stone in the product at Muscle Shoals was, under normal conditions, less than 1%. In rotary kilns, with proper crushing and sizing of the stone, it is easily possible to reduce the unburned stone to the very small fraction of 1%.

"The fuel used at Muscle Shoals was pulverized coal. Temperature control was obtained by control of the coal feed and air supply.

"The ratio of coal to lime burned was about 2.8 lbs. of lime to 1 lb. of coal. The quality of the coal, however, was inferior. With a good grade of coal it is easily possible to burn 3 lbs. of lime to 1 lb. of coal."

CLAY KILNS

Pulverized coal as a fuel for the kilns of the clay industry offers a very alluring prospect, in view of the fact that in other industries where this method of firing has been in operation the savings are from 25 to 50 per cent of the fuel used. Where the fuel bill is $100,000 per year, this makes a substantial sum to take care of the operation and proper over-head charges and leave a handsome profit beside.

When considering the application of powdered coal to the burning of clay wares, we find that there are certain conditions which must be taken into consideration, involving the type of kiln, kind of ware, temperature at which it must be finished, with special reference to the fusing point of the ash in each particular case, as well as the chemical make-up of the ash, with reference to its tendency to combine with the brick.

In considering down draft kilns we know that even if it were possible from a combustion standpoint to obtain complete combustion in the fire box, that it is not possible properly to control the burning of its contents, unless a part of the combustible is carried over and burned among the kiln contents. This naturally leads to the point where we must deal with a certain amount of ash in the kiln. First, with reference to its action on the ware itself and second, with reference to its proper disposal. It is quite evident that if the finishing temperature of the ware is higher than the fusing point of ash, that we will have slag, and if this slag tends to combine with the product the ware will be damaged. The disposal of unfused ash so carried over is of small importance, the difficulty being in proportion to the amount of ash and the facility with which it can be removed. The cleaning of these flues is necessary at certain intervals under any condition.

The burning of ware in down draft kilns where a comparatively low temperature is required, such as in making paving brick, face brick or tile, with coal of a relatively high fusing point ash, will offer no particular difficulties aside from the distribution and control arrangements of the system that is used.

Where scoves or clamps are used for common brick, there is no question of ash disposal to be considered, and usually, the ware is finished at a comparatively low temperature, so that this clay ware seems to offer the most promising field at present.

Continuous kilns of the tunnel type that are fired in the doorways, at which point about 75 per cent of the fuel is used, and muffle kilns, offer an opportunity to save fuel without serious difficulty in operation.

The advantages of powdered coal in addition to a net profit which might be as high as $25,000 per year in some brick yards, are that the fuel can be transported around the kilns in pipes much the same as gas or oil, requiring a minimum of labor and substituting machinery for men. Compared with hand firing the burning period can be materially reduced, because during the oxidizing period, fuel can be applied up to the limit of the ware to absorb it. Oxidizing conditions can be maintained throughout the burn, further reducing the burning period and improving the quality of the ware. Of course, it is largely by reason of having the air under control that economy of fuel can be obtained.

CATHODE FURNACES

These furnaces take the electrolytic cathodes and melt them for casting into shapes for the market. This process gives copper 99.94 per cent pure. Furnaces of this type have been using powdered coal with the same consumption (175 lb. per ton) as the anode furnaces.

COPPER REVERBERATORY FURNACES

Fig. 90 shows a complete pulverized coal plant with raw coal storage and 5 copper smelting furnaces. This plant is that of the Nevada Consolidated Copper Company,

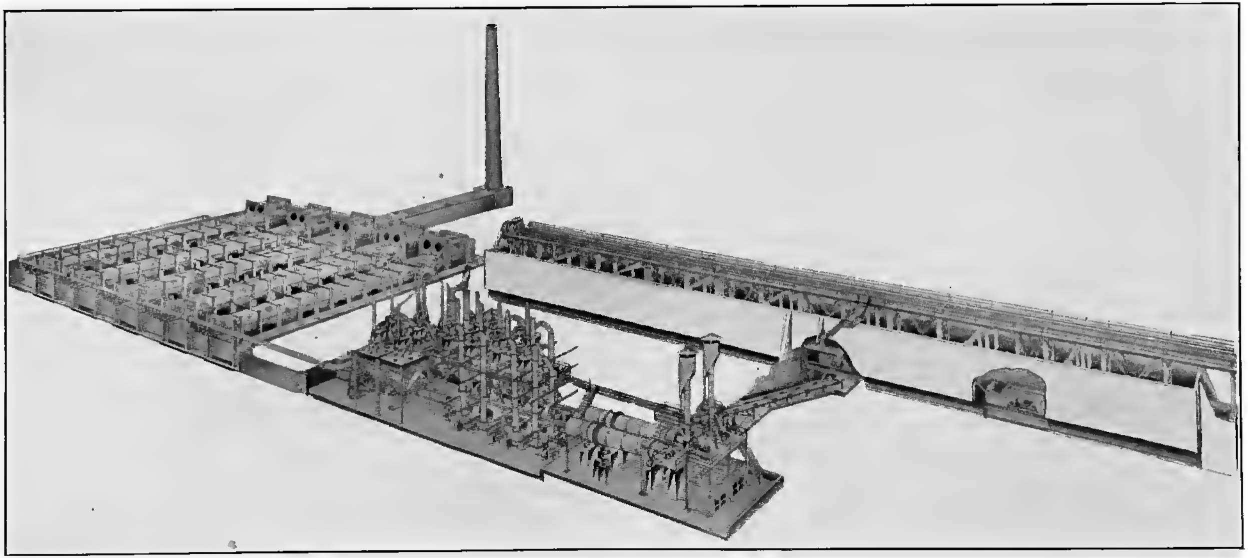

FIG. 90.—Nevada Consolidated Complete Plant.

located at McGill, Nevada, and the following description by Mr. R. E. H. Pomeroy, superintendent of this plant, will be of interest: *

"Early in the year 1917 it became evident, owing to existing and pending market conditions, that a substitute for crude petroleum must be found for firing the smelter furnaces.

"After a review of the then existing plants it was deemed advisable to depart from their practice and to adopt the following described system of distributing pulverized coal to the furnaces:

"The principal advantages of the newer system which influenced this decision were:

1. Equal safety. No pulverized coal is stored at the furnaces.
2. Greater ease of operation, i. e., furnace firing is controlled by regulating valves in burner branches, as in gas firing.
3. Better organization. All machinery, including pulverized coal feed, is under one roof and under an organization separate from the furnace department.
4. Greater cleanliness. All machinery is under vacuum.
5. Greater flexibility of application. The coal and air mixture can be piped where needed.

"The design of the plant is the result of the combined efforts of the local engineering staff and the machinery manufacturers. Many new features were embodied in this design to insure greater safety, cleanliness and efficiency of handling methods. After fourteen months of continuous operation, the plant has proven entirely satisfactory.

"The building is of structural steel covered with corrugated steel and painted light gray inside and out, with many windows giving ample illumination.

"The plant is operated entirely by electric power. All

---

* The author is indebted for permission to use this description to the American Institute of Mining and Metallurgical Engineers, for whom Mr. R. E. H. Pomeroy prepared this matter.

alternating current is 550 volts, 3 phase, 60 cycles. The pulverized coal feeding motors and control mechanism are operated by 220 volt direct current supplied by motor generator sets in the building.

"Automatic push button controlled switches are in use wherever possible. All power headers are located in the roof trusses with branches in conduit leading down to and under the concrete floor to the motors.

"The building floor is of concrete with ample drains to the sewer and the building is equipped with fire and service water piping.

"All motors are direct connected or driven through Link Belt silent chains or James speed reducing transmissions running in oil.

FLOW SHEET

"Raw coal in storage bins is received in standard cars over railroad track scales and delivered to the bins on a steel trestle spanning the bins, the supports of which are independent of the bin structure. This trestle is equipped with walkways and grizzlies, and either slack or mine-run coal can be received for pulverizing.

"Storage bins eight in number, are of reinforced concrete with concrete partitions which subdivide them into fire-proof compartments. Each bin is provided with two thermocouples which indicate, at a control station, the temperature of the coal at two points in each bin. There are six pipes placed vertically in each bin through which temperatures are taken with a thermometer. Even though the coal is over 22 ft. deep, when the bins are full, we have been able to prevent spontaneous combustion by drawing off the coal wherever heating commences. The bottoms of the bins are sloped toward the center at an angle of 35 degrees, which has proven a little too flat for self-cleaning. At the bottom of the slope at the center are 64 steel chutes with C. I. basket gates which deliver the raw coal to the feeders located one on each of two portable cars in a tunnel under the bins. These feeders are operated by variable speed motors, the speeds of which are regulated according to the number of pulverizers operating in the main plant. Each feeder discharges into the jaw of a single roll coal crusher, also mounted on the portable cars, so that when mine-run coal is fed it emerges from this machine as slack.

"At this point it was found that a dangerous accumulation of coal dust was formed. Suitable suction piping was attached to the crusher cars and connected to the intake side of a fan located outside of the structure. This eliminated the dust nuisance which, while very small in quantity, was a considerable hazard if allowed to accumulate at its inaccessible source. This fan discharges to the atmosphere.

"The crushed coal falls on a conveyor belt which transports it to a junction chute, near the center of the bin structure, where it falls onto either or both of two inclined conveyor belts which convey the coal over Merrick weightometers to the main building. Suction piping connected to fan prevents dusting as coal falls onto inclined conveyors. The discharge coal from the inclined conveyors falls into a two-way chute, with a positive splitter, which deflects the stream to either or both of two screw conveyors feeding the Ruggles-Coles type A-14 dryers.

"The coal required for firing the dryers is taken at this point into a small coal bin or tank from which it is wheeled to the fire boxes and hand fired. The original arrangement provided a chute which delivered the coal from the screw conveyor directly to the fire box, and did not prove entirely satisfactory. It gave no means of determining the coal burned in the drying operation and was abandoned. Pulverized coal could be used for firing the dryer and this may be done at a later date, if a saving can be shown. The dryer consumes approximately $\frac{3}{4}$ of one per cent of the coal dried.

"A by-pass chute is attached to one end of one of these screw conveyors through which coal can be moved out through the side of the building into a standard railway car, to be used elsewhere or for the removal of coal from the concrete bins in case of fire in the raw coal.

"The gases from the dryer pass through an induced draft fan and are discharged through a gas washer to the atmosphere, and the wash water is passed to the sewer. The ashes falling through the dryer grate are flushed away intermittently to the sewer by a stream of water from an automatic flush tank, the water used being waste water from the power plant.

"Dried coal leaving the dryers discharges through dust-tight housings into screw conveyors. At this point provision has been made to discharge coal on the floor through an emergency gate and to wet the coal in the conveyor should the dryer become overheated and the coal catch fire. From the dryer discharge conveyors the coal falls into two longitudinal screw conveyors which move the coal to the pulverizer feed bins. At the point where the coal falls between conveyors there is inserted the bulb of a Bristol recording thermometer and this record is used as a guide in operating the dryer. Moisture samples are taken every half hour of the coal entering and leaving the dryer and as the discharge coal sample is taken by hand, this also serves to prevent overheating of the dryer in case of failure of the thermometer. As a further precaution against overheating, the power leads to the induced draft fan are taken off past the switch to the dryer drive motor so that the fan motor can only be run when the dryer is in operation and is shut down with the dryer, though the dryer may be revolved without the fan in operation.

"The coal from the conveyors falls into four hoppered bins of small capacity from which it is fed to the pulverizers through feeders. The feed of slack coal to the pulverizer is regulated by the electrical load on the machine as indicated by ammeter.

"The pulverizers are 36″ Bonnet Mills, seven in number with places provided for eight. As in common practice with other types of pulverizers the coal is drawn out of the mill by a current of air, passed through a separator, circulating fan, main and auxiliary dust collectors. The air returns to the mill and the coal falls from the collectors to screw conveyors.

"The only difference between this system and current practice is that the latter vents the excess air from the auxiliary collectors to the atmosphere while the excess air here is piped from the auxiliary collectors to the main suction header, described later. The vents are capped above the roof and serve only as safety valves in case of explosion.

"The screw conveyors, below the collectors, carry the coal to the 50 ton pulverized coal storage bins. These are four in number provided with emergency explosion doors and compressed air kicking devices to prevent hanging up and are calibrated to measure the contents from the floor at will.

"From a cast-iron hopper at the bottom of these bins the coal is drawn off by the pulverized coal feed screws, four per bin, and dropped into the air current in the main suction header, leading to the distributing fans. These feed screws are driven through roller chains by direct current variable speed motors. The speed of these motors is regulated by a sheet metal cone floating in the air current in the main suction header and known as the indicator. This device is connected by means of a light cable over sheaves to the regulator mechanism which, by means of a rheostat, governs the speed of the feeder motors in proportion to the air flowing in the suction header.

"The proportion of air to coal may be varied within limits but it has been found best to maintain a ratio of fifty cubic feet of air to one pound of pulverized coal. A recording instrument is attached to the indicator, which continuously records the rate at which the air is flowing; and revolution counters record the operation of the feed screws.

"The suction header is connected to the auxiliary pulverizer collectors, before mentioned, and the return line auxiliary collectors, described later, and draws the necessary make-up air from the top interior of the building through a goose neck extending up through the roof and down again to the indicator. Thus, all dust producing points are exhausted by vacuum and the building is automatically ventilated. This header is amply provided with explosion doors as the coal mixture is lean and explosive. The 50 to 1 mixture is too rich to explode, hence this precaution is not needed on the distributing header.

"The distributing fans receive the proportioned air and coal through the suction header, and mix and discharge the mixture through the discharge header to the distributing header.

"The distributing header leaves the coal plant and passes along the firing end of the reverberatory furnaces at a convenient distance away and above them. Opposite each furnace seven inch diameter drop pipes take off from the bottom of the main through slide gates, regulating valves, burner pipes and burners to firing wall openings in the reverberatory furnace. The main distributing header is reduced in diameter after each furnace take-off to maintain the requisite velocity of mixture and prevent settlement of the suspended coal dust. After serving the reverberatory furnaces the header makes a 180 degrees turn upward and backward, returning to the coal plant the remaining mixture through the return header.

"The return header enters the coal plant and breaks up into branches which lead to the return line dust collectors and to the return line auxiliary dust collectors. These collectors are located above the 50 ton pulverized coal bins in the coal plant building and the coal removed from the mixture is thus returned to be fed again to the suction side of the distributing fans. The quantity returning varies from 10 to 100 per cent of the total coal fed to the suction header, depending on the amount of mixture being taken off by the furnaces. Thus, even though no coal is being taken off for burning, the coal in the 50 ton bins is being constantly turned over, preventing spontaneous heating, so long as the distributing fans are in operation. The return air, relieved of most of its burden of coal dust, passes from the auxiliary return line dust collector through a header pipe to the main suction header joining the latter above and before passing through the indicator.

"This completes the cycle through which passes the main bulk of the coal burned.

"Further application of coal dust firing to other departments is made as follows:

Matte Transfer Cars. Taking off from the main distributing header on the bottom of the pipe are 4–5″ take-off pipes. These are located at intervals where required between the coal plant and the point where the main distributing header turns back as the return header. Each take-off is provided with slide gates, a control valve, burner pipes and burners and the fuel is used intermittently for firing portable matte transfer cars.

Roaster Extension. Taking off at the end of the main distributing header is a 12″ pipe. This take-off leads through a 12″ gate valve and 283 feet of 12″ pipe, as shown in Fig. 90 to a booster fan which is 41″ in diameter and is run at 1750 r.p.m. The discharge from this fan at increased velocity and pressure passes through 435 feet of 12″ pipe to the roaster plant. Here it passes along one side of the building for 320 feet as a header and is tapped for each furnace through 3″ take-off pipes, valves, etc. The main is tapered as it advances to maintain a carrying velocity and there is no return line.

"This extension is quite recent but has not given a great deal of trouble if enough burners are in operation to prevent the line choking up with coal dust. A return line system would work more smoothly but would require a larger main line, for the same capacity, as well as a return line with a return line booster fan, thus being more costly to construct and using more power.

Waste Heat Boiler Branches. "During the period of high pressure operations, while the war was on, it became necessary to utilize all possible boilers in the entire plant. Twelve inch take-off pipes were installed at suitable places on the main header and branch pipes were run through shut-off valves to the waste heat boilers located in the flues of the reverberatory furnaces at a distance of approximately 150 feet. Pulverized coal was burned for months on all boilers in the flues of the furnaces idle or down for repair. No efficiency tests were made and pipe size and velocity were not correctly proportioned, but the flexibility of the system was clearly demonstrated."

Up to the end of July, 1919, the plant has pulverized 173,230 tons of raw coal.

The power consumption for the entire operation has been about 30 k.w.h. per ton raw coal pulverized. It must be borne in mind that any comparison of this figure with the power required for other systems must take into consideration the blast power, usually furnished from an outside source, which is blown into the furnace with the dust.

The wear has not been excessive considering the nature of the service and has been almost entirely confined to the fan wheels and housings. Ample provision has been made for repairs here and no operating time has been lost while making repairs due to wear.

The capacity of the pulverizers is from 4½ to 5 tons per hour and the plant was operated for six weeks at an average daily rate of 550 tons of raw coal pulverized. Owing to the large storage capacity for pulverized coal in the 50 ton bins, it is only necessary to man the plant for pulverizing one or two shifts out of three when burning not over 300 tons daily.

Fig. 90*a* shows application of pulverized coal to copper smelting furnaces.

FORGE FURNACES

From a mechanical point of view the past three years in the forging field have been years of intense development. In this period noteworthy records have been made, very often under the most adverse conditions. One of the many handicaps encountered was the frequently inadequate oil fuel supply; and even when obtainable, the cost was apt to be almost prohibitive.

These unsatisfactory conditions gave a great impetus to the development of other methods of generating heat from the most abundant and less costly fuel-coal.

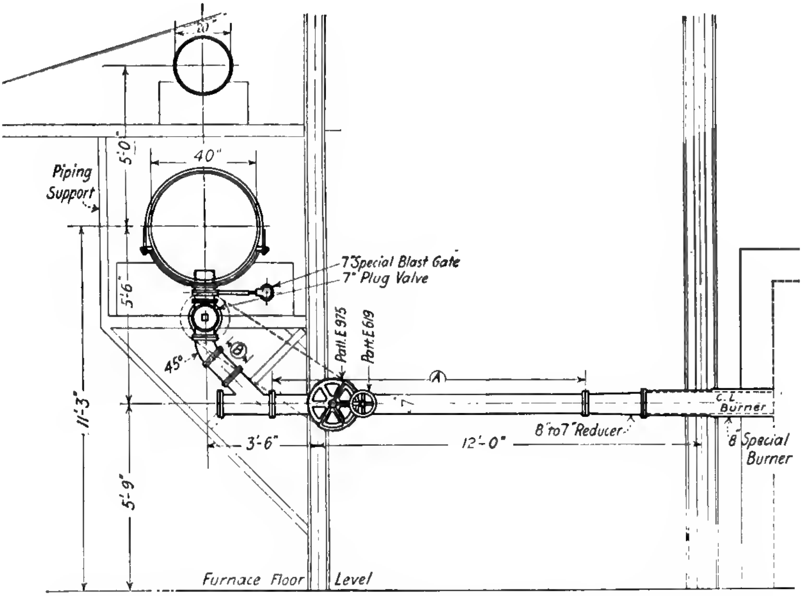

FIG. 90*a*.—Application of Pulverized Coal to Copper Smelting Furnace.

The logical solution of the problem was found at many plants in the adoption of powdered coal, and as a result, this fuel is to-day being burned in over five hundred forge furnaces of all sizes and on all kinds of work with most satisfactory results and hence demands the earnest consideration of all progressive engineers.

Fig. 91 shows a pulverized coal regulator valve which has been in use for over a year by the Oliver Iron and Steel Co. for their forge furnaces.

The valve is patented by Messrs. Thomas and Dahlstrom who describe the valve as follows:

"The valve seat and valve stem are self-cleaning. The operation is just the same as opening or closing an ordinary valve. It will regulate the heat in the furnace to any temperature desired.

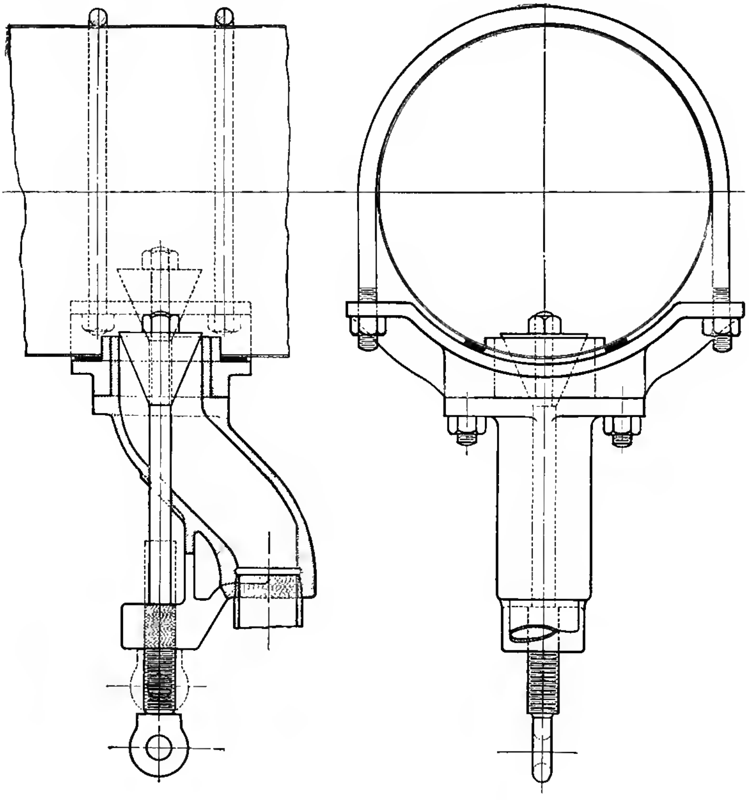

FIG. 91.—Dahlstrom Valve.

"There is nothing in the valve that will wear out fast, and it should last a long time. The valves can be made any size desired."

PRESSED STEEL CAR COMPANY

In the Pressed Steel Car Company's, McKees Rocks plant, a powdered coal plant (Holbeck System) has been in operation for over two years.

In their forge shop department there are 72 furnaces of all types. Some of these serve Bradley hammers, others drop hammers, while still other furnaces heat the steel for a 1500 ton press and a 5000 lb. steam hammer. Here, most of the furnaces are so constructed that they can be readily altered to heat for different classes of forgings. For instance, a particular furnace to-day may do "end heating," tomorrow "center heating," and on a third day the demand may be for a bending or a welding heat, so there must be a flexibility in the fuel as well as in the furnace.

It is as easy to get the range of temperature demanded in these furnaces with powdered coal as with the fuels supplanted, natural gas and fuel oil.

Likewise, no difficulty has been experienced in obtaining and maintaining any degree of heat necessary for the different forging operations, and this has assured an output at all times equal to and generally greater than that formerly secured.

Fig. 92 shows a forge furnace for heating steel for a 5000-lb. hammer.

It is a well-known fact to all who have operated the small type of forge furnaces that it is a real problem to properly dispose of the products of combustion, no matter what the fuel may be. This is apparent when it is taken into consideration that in this type of furnace the combustion space is very small, the temperature high and the velocity of the gases necessarily great. To prevent any contamination of the air by the spent gases, in this shop, an exhaust system with three stacks, 66 inches in diameter by 125 ft. high, was installed. Hoods were then placed over the furnaces and connected to the stacks by suitable ducts so that the waste gases were rapidly carried away. This system takes care of the gases in a satisfactory manner.

The secondary air is furnished by two large fans through the same piping as was originally installed for the natural gas and oil burners.

The smallest forging furnace in the shop has a sectional area of 24″×9″ while the largest has a hearth area of 5′4″ ×9′0″. In the smaller furnace ½″ rounds are heated and in the large one, billets as large as 5″×5″. This latter furnace has two large burners in opposite sides. Those furnaces used for "end" and "center heating" are underfired with opposing burners.

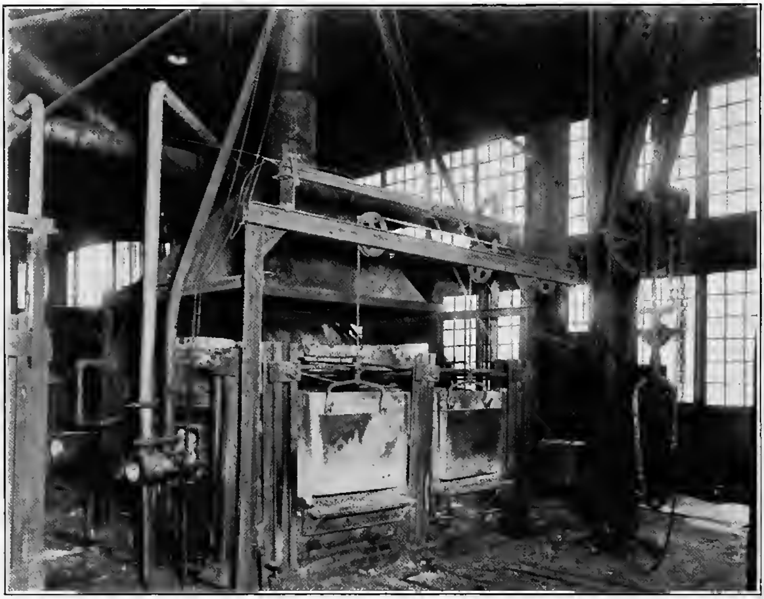

Fig. 92.—Pressed Steel Forge Furnace.

A test made on one of the furnaces heating for a Bradley hammer showed that it took eight minutes to bring two ⅝″×2½″ flats to a welding heat with eight pairs in the furnace. A pair was welded and finished on the hammer in three minutes.

The author has timed the same operation on the same kind of a furnace in a railroad car shop using fuel oil in which it took eighteen minutes to heat one $\frac{5}{8}'' \times 2\frac{1}{2}''$ flat to a welding heat, with four pairs in the furnace.

Fig. 93 shows a furnace for "end heating" and welding.

FIG. 93.—Pressed Steel Forge Furnace.

VERONA TOOL WORKS, VERONA, PA.

At this plant there are 30 forge furnaces and 14 of other types. Here the class of work is standard, with but little variation from day to day. The fuel burned in the small forge furnaces, before the introduction of powdered coal, was coke and fuel oil and in the large furnaces, hand fired coal.

Fig. 94 shows one of the small forge furnaces at the Verona Works.

The largest furnace has three side doors, while others of this general design have one or two. Each furnace is provided with an individual stack, hence the question of getting rid of the products of combustion was easily solved. Burners are placed in the rear so that the flame impinges on the bridge wall and then passes over into the heating chamber. To adapt these furnaces to burn powdered coal practically no modification was made in the construction. The grates, which were used when "hand fired," were covered with a bed of ashes and a small opening provided in order to drain off the slag from the combustion chamber.

FIG. 94.—Verona Tool Co. Small Furnace.

The secondary air supply to the burners is not from one central system, as is generally the case, but is arranged so that a furnace is made an independent unit in this respect. This is accomplished by providing each furnace with a separate fan directly connected to a small motor.

Fig. 95 shows the three door type forge furnace at Verona.

The hearth area of these forge furnaces varies from 5′ 0″ wide by 9′ 0″ long, to the smallest which is 2′ 0″ ×3′ 0″ long.

The application of powdered coal to these furnaces has produced a heating unit which in every respect meets, and in many ways exceeds, expectations.

A test was conducted on one of the two door furnaces with the following results:

Fig. 95.—Verona Tool Co. Large Furnace.

"Fire was started with furnace cold, at 11:40 A.M. The charge was 14 bars, $2\frac{1}{4}''$ square and about 36″ long. At 1:05 P.M. the first bar was taken out and in 15 minutes five pieces had been drawn and forged into "claw bars."

Fig. 96 shows the distributing blower and powdered coal feeding mechanism at the Verona Tool Works.

WARWOOD TOOL WORKS, WARWOOD, W. VA.

As an illustration of the adaptability of powdered coal to a small forge furnace, there is probably no better one than the Warwood Tool Company.

The output from this plant is a high grade of mining tools and great care is exercised in the proper heating of the steel.

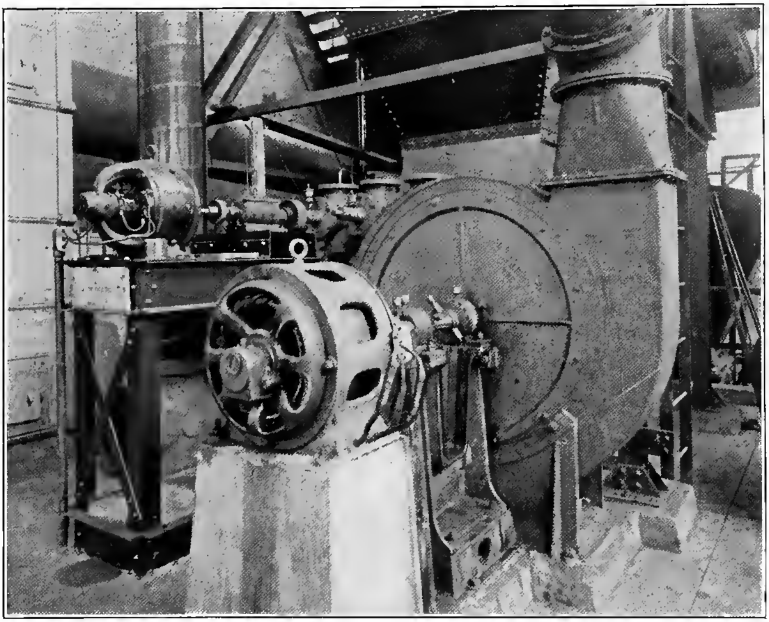

FIG. 96.—Verona Distributing Blowers.

The 22 furnaces here are practically all of the small open front type used in "center" and "end heating." The heights of the opening vary from 2 in. to 4 in. and the length from 30 in. to 48 in. The heating in these furnaces has been uniform and the capacity is easily maintained. Each furnace is provided with an individual stack and hood for the disposal of the waste gases.

The requirements of this small pulverized coal plant are from 3 to 5 tons per day, although it has a capacity of $1\frac{1}{4}$ tons per hour.

In the three plants just described, the Holbeck System of air distribution is used.

SIZER FORGE COMPANY, BUFFALO, N. Y.

At this plant the Fuller Engineering Co. installed a powdered coal plant about two years ago which has been in continuous successful operation since.

The heating furnaces are of the reverberatory type, ten in number and there are five 250 h.p. boilers, one located between each pair of furnaces, the fronts of furnaces and boiler fire boxes forming a straight line. All furnaces have four doors of the water-cooled type, hydraulically operated.

The furnaces are designed with a combustion zone, a space between the burner wall and the center line of the first door, sufficient to permit the proper expanding of the gases during combustion, precipitation of molten ash and to prevent impingement of flame upon billets.

Fig. 97 shows the battery of 10 forge furnaces.

Boilers are set back of the heating furnaces, but the fire boxes extend between the heating furnaces, forming a combustion chamber and flues for direct firing as well as for the use of the waste gases from the heating furnaces.

Each unit of two heating furnaces and one boiler has three burners. The boiler is equipped with a burner for the purpose of supplying heat in addition to that from the waste gases to develop.

Operating conditions are similar to oil and gas fuels. The coal and air are adjusted to give a certain flame condition in the furnace and require no further attention. Very uniform temperature is obtainable throughout the furnace. When lighting a fire in a cold furnace it is necessary to have a small fire to ignite the coal dust. A piece of lighted oily waste is usually thrown into the combustion chamber for this purpose, only a few minutes' time being required to heat the surrounding brick work to a temperature that will support combustion.

The temperature is the principal operating factor in a furnace when considering the form of ash and its disposition. Some coals have more ash than others and some ashes melt at a lower temperature than others.

Fig. 97.—Fuller No. 201, 10 furnaces, 5 Boilers.

In these furnaces the flame temperature is maintained at 2400° F. approximately, and practically all of the ash, with the present quality of coal, is in powder form, a small percentage of which settles on the hearth, the greater part being precipitated in the flues. These flues are cleaned daily. The powdered ash is scraped out, shoveled into a receptacle and sent to the dump.

Fig. 98 shows the arrangement of furnaces and powdered coal bins.

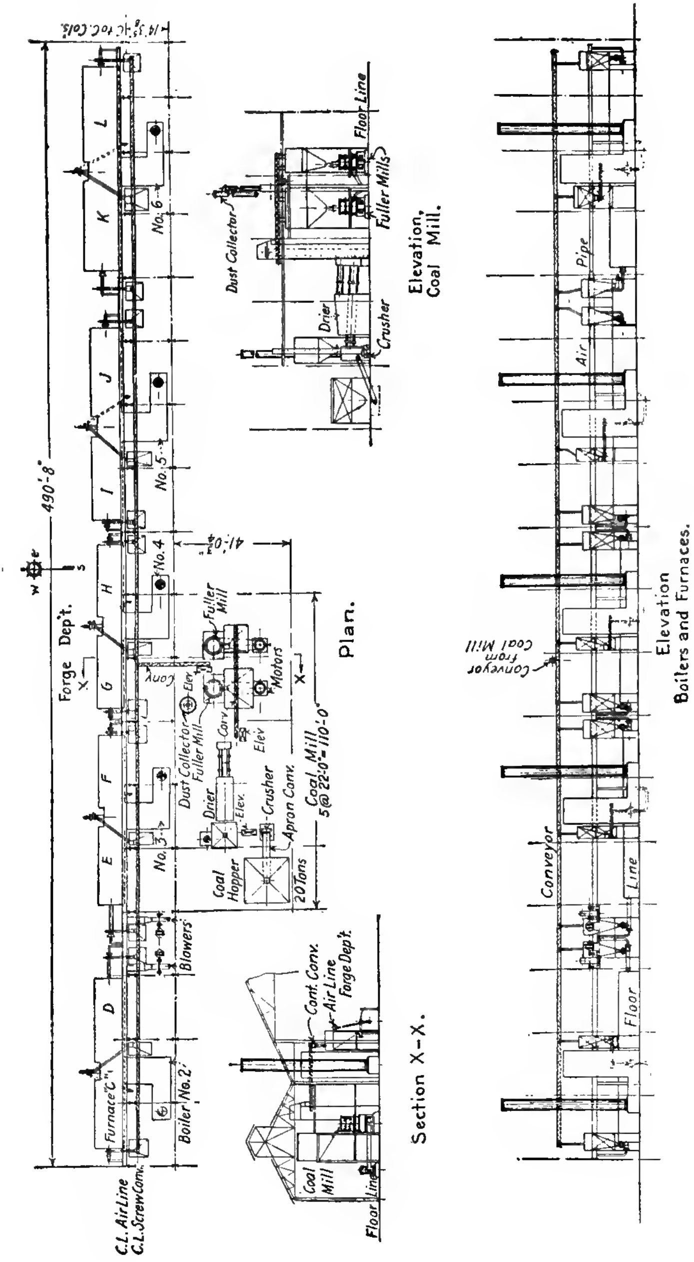

FIG. 98.—Fuller No. 201, Arrangement of Furnaces.

Fuel consumption varies according to the kind and weight of steel being heated and the amount of work done in forging. Fuel consumption is 40 per cent less than in hand fired furnaces.

With present practice, heats are made in 10 per cent less time than in a hand fired furnace doing similar work.

Oxidization is reduced to a minimum. Steel comes from the furnace practically free from scale and ash deposit.

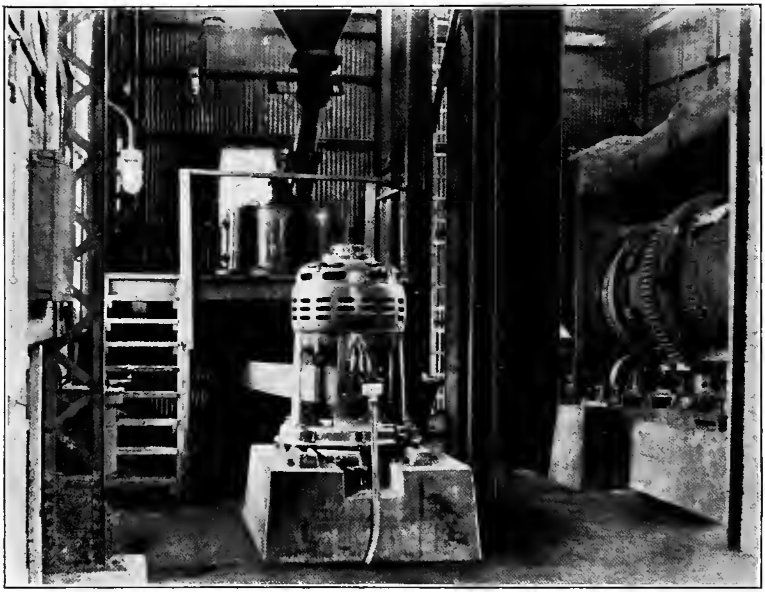

Fig. 99.—Fuller No. 201, Pulverized Coal Plant.

One man per shift is required to inspect coal feeding and burning mechanism.

The life of the refractories is increased 25 per cent.

Smokeless conditions are obtained in the forge shop that would be impossible with the old method. Any desired flame condition can be obtained at the door.

In the waste heat boiler, 4 lb. of water (approximately) are evaporated per lb. of coal as fired into the forge furnace.

Fig. 99 shows a view of the pulverized coal plant.

In the coal plant, after the coal is dried, it is elevated and spouted into a 25 ton bin from which it flows by gravity through a spout into the feeder of the pulverizer.

Two 42 in. Fuller-Lehigh pulverizers of the fan discharge type are employed. This mill is a vertical type, pulverizing by centrifugal force, and is described on page 28 of this book.

After pulverizing, the coal is spouted into the boot of the bucket elevator, elevated and spouted into a convevor serving the pulverized coal bins located at the heating furnaces and boilers.

FIG. 100.—Fuller No. 201, Unit, Two Furnaces and Boiler.

Fig. 100 shows a unit of two furnaces and one boiler.

There are fifteen 5 ton pulverized coal bins, one for each of the furnaces and boilers. Bins are designed with one side vertical to prevent the hanging of coal-flange bottoms and are provided for attaching screw feeders.

Fig. 101 shows the boiler fire-box and auxiliary burner.

A 3 in. Standard Fuller Engineering Co. screw feeder is attached to the bottom of each pulverized coal bin. This consists of a cast-iron hopper shaped casting, corresponding with a hopper flange attached to the coal bin and fitted with the necessary bearings and sprocket wheel.

Back geared, direct current, variable speed motors are used for driving, each screw feeder being connected by a chain. The motors are mounted on platforms adjacent to the screw feeder.

FIG. 101.—Fuller No. 201, Boiler, Fire Box and Burner.

The screw feeders are connected to the burners by a spout.

Fig. 102 shows the connection between burner and coal bin.

The burners are made with an opening to receive the pulverized coal, the plate covering inside causing induction of air at this point. Air for combustion is supplied by two volume fans having a capacity equal to the requirements of twelve heating furnaces and three boilers. These fans are driven by direct connected motors. The air is

FIG. 102.—Fuller No. 201, Burner and Coal Bin.

expanded in the burner to one-quarter inch water pressure. Low velocity of air at the burner is of great importance for securing the best results. High velocities cause cutting of refractories and increase the cost of repairs, also impingement of flame on the metal being heated, producing a cutting action which is very undesirable.

Fig. 103.—National Bolt and Nut Co.—Nut Furnace.

NUT FURNACES

Fig. 103 shows a picture of a nut furnace in operation at the National Bolt and Nut Company, Pittsburg, Pa.

Pulverized coal superseded natural gas with the result that a tonnage of large nuts formerly requiring a 10-hour day to produce with gas is now accomplished with powdered coal in four to six hours.

OPEN HEARTHS

The use of powdered coal in open hearths is still in its infancy, for many reasons, chief of which is the failure of open hearth furnace makers to design a furnace for powdered coal burning. There seems to be a lack of cordiality towards powdered coal on their part and the powdered coal manufacturers are so busy installing pulverized coal on so many other and easier kinds of furnaces, that the open hearth stands neglected by all.

However, the writer believes that very shortly powdered coal will be as successfully burned in open hearth furnaces as any other.

Mr. J. W. Fuller says in part on the subject of pulverized coal for open hearths in a paper read at the St. Louis meeting of the American Iron and Steel Institute in October, 1916:

"The best coal for use in open hearth practice is a bituminous coal as high in volatile matter as possible and preferably low in ash. A coal having 0.64 per cent moisture, 35 per cent volatile matter, 50 per cent carbon, 5 per cent ash and 1.36 per cent sulphur, gives excellent results. A coal of this analysis has a heating value of 14,200 B.t.u.

"Unless the coal is pulverized to a very high degree of fineness and the efficiency of the burner is high, combustion will not be complete before the gases come in contact with the metal in the bath. This would cause excessive oxidation loss, as there would be, with incomplete combustion, free oxygen in these gases which very readily attacks the charge at the temperature within the furnace at this period of operation. It has been shown that by having combustion complete, immediately after the fuel enters the furnace and minimizing free oxygen in the gases when they come in contact with the metal in the bath, oxidation losses are reduced from one to three per cent below the average practice of other fuels.

"The most important point depending upon complete combustion is to keep the sulphur in the fuel from going into the charge. Sulphur, as it enters the furnace is mechanically mixed with the coal in pyrite form and unless combustion is immediately completed so that all of the sulphur is burned to sulphur dioxide and is allowed to pass out of the stack with other waste gases, it is apt to combine with the iron. This is very undesirable as it requires additional time to remove it from the charge before tapping the heat.

"It has been found that for high furnace efficiency the velocity of the gases must not be very great. With high velocities the coal is not entirely consumed before the gases leave the furnace and a great deal of its heating value is lost in the outgoing gases aside from the increased amount of trouble experienced due to the unburned or fused particles of carbon and ash being carried over into the regenerator chamber, causing the checkers to become clogged up after a short time.

"In order to obtain a maximum number of heats before rebuilding the checker work in the regenerator chambers, it is very essential to provide means for the easy cleaning out of these chambers.

Fig. 104 shows a 50 ton open hearth furnace using powdered coal.

"Another item of great importance is to have a removable slag pocket or its equivalent placed between the furnace and regenerator chambers, so that all of the heavier and fused particles of carbon, ash and slag which may be in the flue gases will be removed before they reach the checker work in the regenerator chambers. This has been accomplished in several plants, and every week-end these slag pockets are removed and new ones put in their place in less than 40 minutes per furnace. It is also well to remember that in designing the slag pockets of a furnace, it is an advantage to give the gases a centrifugal motion on their way to the regenerative chambers, so as to facilitate the removal of the heavier particles which might do considerable harm if allowed to pass on to the regenerative chambers.

"In reference to regenerative chambers, they should be

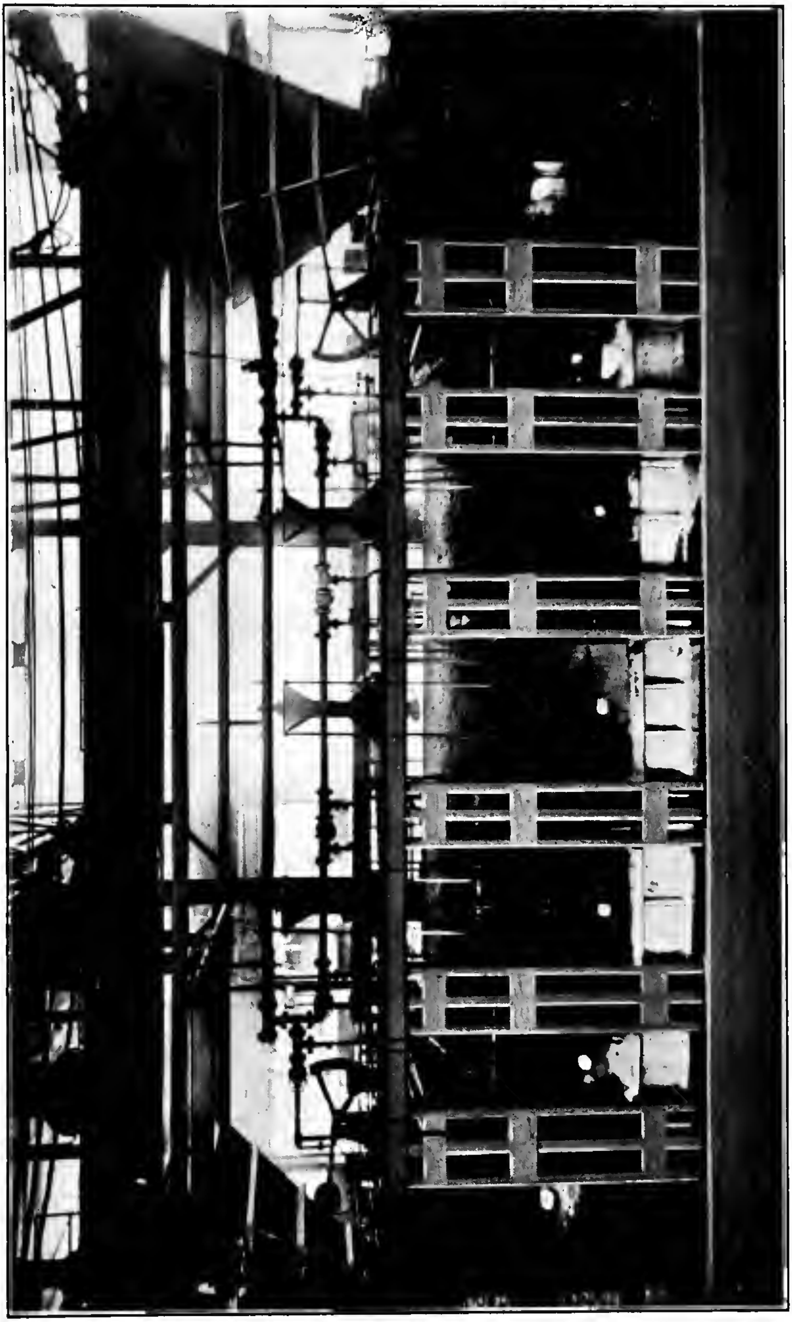

FIG. 104.—Fuller Open Hearth Furnace.

of ample size to afford sufficient surface for contact with the gases. With powdered coal as a fuel the most satisfactory checker brick to use is a regenerative tile having dimensions of 21×9×3 inches, laid in such a way as to form vertical flues having openings of at least 6×9 inches or better 9×11 inches.

"In reference to the regenerator tiles themselves, it is good policy to provide means of blowing the accumulation of ash and soot off the top courses between each heat, or at least once a day, thus allowing it to settle through the checker into the rider walls, from where it can be easily removed. It is also advantageous to provide small doors or openings along the side of the regenerator chambers, so that after a run of 150 to 160 heats, it will be possible to remove the first one or two courses of regenerator tiles by the use of peel."

ATLANTA STEEL COMPANY

The author recently visited the open hearth plant of the Atlanta Steel Co., which was installed by the Fuller Engineering Company in 1915 and is able to give the following information:

"There is one 60 ton capacity open hearth furnace in operation. They are able to get from 200 to 250 heats before finding it necessary to shut down for repairs. The roof of the chamber gives out the first. Water-cooled pipes are installed in the side and bridge wall.

"Compressed air at 100 lb. pressure is used once every 24 hours to blow out the fine ash which deposits on the checker work.

"They are able to get 15 heats of 50 tons each per week on powdered coal, burning 600 lbs. of coal per ton.

"Compressed air at 6 in. pressure is furnished in addition to the secondary air to deliver the coal from the feeder into the burner and into the furnace. The diameter of the burner at its mouth is $2\frac{1}{2}$ inches.

"It has been discovered that the discarded bricks from the producer gas fired open hearth furnaces, of which there are two, can be used on powdered coal furnaces, as the fine ash soon closes up the small leaks which are objectionable in the gas fired furnace."

RIVET MAKING

Fig. 105 shows a rivet making furnace operating with pulverized coal at the National Bolt and Nut Company. This furnace has a heating chamber 24 in. wide by 30 ft. long and the rods are placed in one end cold and pulled out at the further end heated, ready for the rivet making machine.

FIG. 105.—National Bolt and Nut Co.—Rivet Making.

As the photograph shows, the pulverized coal is applied at two points, with the chimney at the charging end toward the right of the picture. Formerly, this furnace was fired by about eight or ten natural gas burners along one side of

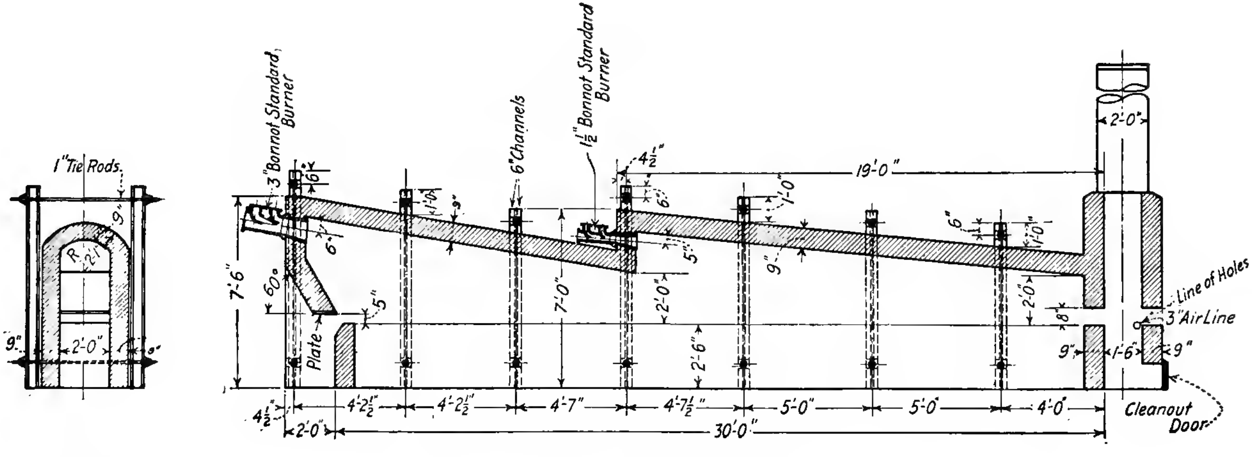

Section B-B.

Section A-A.

FIG. 105*a*.—Furnace Design for Rivet Making.

the chamber, and since changing to powdered coal the cost of making rivets has been reduced from $2.25 a ton with natural gas at 35c per thousand feet, to 75c a ton with pulverized coal, the price of coal being $4.00 a ton.

Figure 105*a* gives a detailed sketch of this rivet making furnace.

SHEET AND PAIR FURNACES

Early in the year 1917, powdered coal was tried out on sheet and pair furnaces. At first, trouble was apparently caused by ash settling on the plates, but later it was found that the ash was not the factor to be considered at all, and that a reducing flame could be produced with powdered coal much more easily and with less disastrous results than with any other fuel.

Also, the plates were not so easily burned with powdered coal.

As to the fuel consumption, it was found that from 260 to 300 lb. of coal were burned per ton of steel, heated in a combined sheet and pair furnace.

Fig. 106*a* shows the front view of a sheet and pair furnace and Fig. 106*b* shows the rear view.

With stokers, it required from 400 to 450 lb. of coal per ton of steel and hand firing requires from 550 to 600 lb. of coal per ton of steel.

In gas producers it requires 600 lb. of coal fired into the producer per ton of steel heated, and in addition requires the coal which is converted into steam used to gasify the coal, plus the large amount of labor necessary to fire the producer, clean out flues, etc.

The advantages gained by use of powdered coal over other fuels may be summed up as follows:

1. Steel after being rolled is softer than with natural gas.
2. Steel opens more readily, thereby reducing stickers approximately 60 per cent.
3. Reduces the necessity of polishing rolls by the elimination of the fine particles of dust on plates, over 75 per cent.

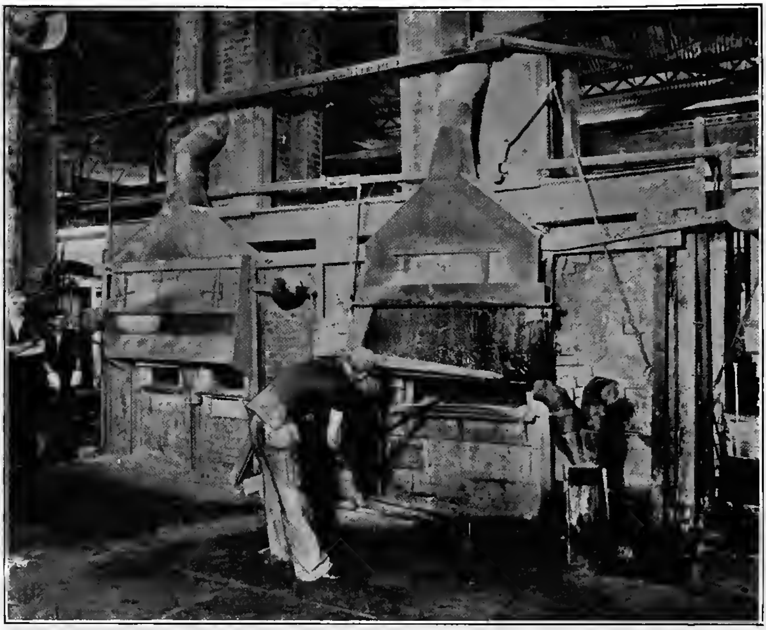

Fig. 106*a*.—Cannonsburg Sheet and Pair Furnaces—Front.

Fig. 106*b*.—Cannonsburg Sheet and Pair Furnaces—Rear.

4. Uniform temperature easily obtained and maintained.

At the present time there are over 400 sheet and pair furnaces equipped and operating with powdered coal.

TIN POTS

Fig. 107 shows the different views of tin pots which have been successfully operated with pulverized coal for over three years.

The amount of coal used varies from 7 to 12 tons per base box of tin and the temperature of the tin bath is easily maintained at 600° without variation exceeding 10° one way or other.

There are at the present time over 300 of these tin pots that are using pulverized coal.

TIRE FURNACES

In the plant of the Armstrong-Whitworth Company of Canada, Ltd., located near Montreal, there was installed in 1917-1918 a tire mill department, the furnaces of which are heated with pulverized coal (Holbeck System).

Fig. 108 shows at the extreme left the discharge end of the continuous heating furnace which takes the tire ingots from the electric melting furnace, heats them and delivers them to a 2000-ton press.

These ingots vary in size according to the diameter of tire desired and are not unlike a pear in shape, having a diameter at the small end of 12 in. and 14 in. at the large end, with a depth of 14 in.

Upon being placed in the 2000-ton press these ingots are pressed to about seven inches and then a hole is punched out about 11 inches in diameter. This operation under the 2000-ton press consumes from one to two minutes. The disk is then placed in a three-door heating furnace, where it is left for about three minutes, then taken out and placed on a 600-ton press where it is "Becked" into the shape of a tire.

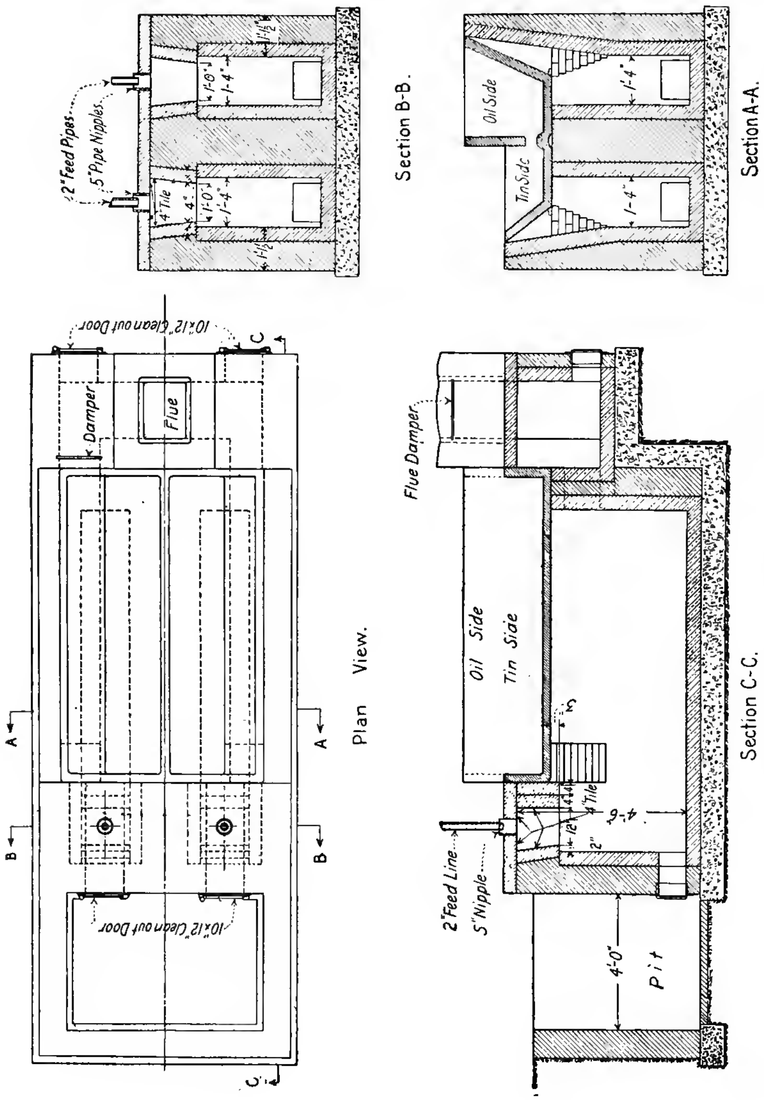

FIG. 107.—Cannonsburg Tin Pot Furnaces.

After this operation the tire is placed in a double four-door heating furnace and taken out on the opposite side and then delivered to the tire rolls where it is rolled to the desired diameter.

The entire time consumed is about 8 minutes from the time the disk is taken from the continuous heating furnace until the tire is rolled.

FIG. 108.—A. & W. Re-heating and Continuous Furnace.

Regarding the fuel consumption with powdered coal in the tire department: A test was made with the two reheating furnaces and it was found that with four burners these two consumed 317.73 lb. per burner, per hour. In addition, however, there was burned in the hours from 3 A.M. to 7 A.M. to bring the furnace up to the desired temperature, 5083.68 lb. of coal in the four burners on the two furnaces.

The tonnage of these furnaces varies from week to week according to the diameter of the tires being made. The tonnage for this particular time was 28 tons in 11 hours or $2\frac{1}{2}$ tons per hour. This gives a result of 508 lb. of coal burned in the two furnaces with four burners per ton of steel heated, or 254 lb. per ton per furnace.

To this amount should be added 181 lb. of coal burned per ton to bring the furnaces up to the desired temperature, which gives a total of 435 lb. of coal burned per ton of steel heated.

But, in addition to the heating of the steel, there was reclaimed approximately 100 h.p. of steam from the waste gases from each furnace by means of a waste heat boiler.

Also, if the furnaces were being operated continuously on both a day and night turn, the fuel consumption would be lower per ton than is now the case.

CONCLUSION

In conclusion it has been found that the results which have so far attended the burning of powdered coal in metallurgical furnaces may be summarized as follows:

1. It has always been possible to secure any degree of heat desired and to hold this heat constant. These conditions are attained through the delivery to the furnace of a sufficient supply of fuel per unit of time and at a uniform rate.

2. A uniform heat, and hence temperature, which is a measure of the intensity of heat, can be easily maintained in the heating chamber. A second factor, the furnace design, must be taken into consideration as well as the fuel.

3. There is a less amount of oxide formed on the steel than is usually the case with natural gas and fuel oil, due to the fact that a more reducing flame can be easily carried. The skill of the furnace operator of course enters in here and will determine the result achieved.

4. The ash of the coal does not interfere in any way with the heating or working of the steel. The welds made with powdered coal as a fuel are stronger than can be made with fuel oil. This has been proven by actual test.

5. The disposal of the products of combustion is effected by means of stacks on the large furnaces, and with hoods and stacks on the smaller types. By equipping the furnaces in this manner, the gases will be easily removed.

EQUIVALENT PRICES OF FUEL

Price of Powdered Coal Per ton, 14,000 B.t.u. per lb.	Natural Gas Per 1000 cu. ft. 1000 B.t.u. per cu. ft.	Fuel Oil 140,000 B.t.u. per Gal. Price per Gallon.
$1.00	3.57c.	½c.
2.00	7.14c.	1c.
3.00	10.71c.	1½c.
4.00	14.28c.	2c.
5.00	17.85c.	2½c.
6.00	21.42c.	3c.
7.00	24.99c.	3½c.
8.00	28.56c.	4c.
9.00	32.13c.	4½c.
10.00	35.70c.	5c.
11.00	39.27c.	5½c.
12.00	42.48c.	6c.

CHAPTER XII

RECENT UTILIZATION OF POWDERED COAL IN BOILERS

THE earlier applications of powdered coal in boilers are described in Chapter VIII of this book.

The trouble experienced in the earlier trials on boilers was due largely to the fact that it was not thought necessary to make any changes in the combustion chamber, with the result that usually grates were removed and powdered coal was blown into the furnace at such a high pressure that the refractories soon gave way under such treatment and it was decided the fault lay in powdered coal.

But, after powdered coal came into extensive use in metallurgical furnaces of all kinds, it was soon found that the secret of successful burning lay in the design of the combustion chamber as well as in the means of transporting the coal to the furnace.

And, as a boiler is in reality a big furnace, the success found in applying powdered coal to furnaces was soon followed up by its installation on boilers, so that within the past two years, over 26,000 h.p. have been in operation and the future is indeed promising, with contracts for over 80,000 h.p. to be installed during 1920.

In considering the advantages which have been proven in the use of pulverized coal on boilers, necessarily the comparison must be with boilers fired by stokers.

Mr. H. G. Barnhurst says in one of his bulletins: We maintain and can prove the following advantages for pulverized coal over stoker installations:

Fig. 109, 2400 h.p. Sterling Boiler.

1. Much wider variation in the quality of the coal usable

is obtained when burning coal in pulverized form. All grades of coal are being burned in pulverized form with economy. No stoker will satisfactorily handle all grades of coal. Therefore, the use of pulverized coal largely overcomes most troubles due to poor coal and it is particularly desirable for this reason alone.

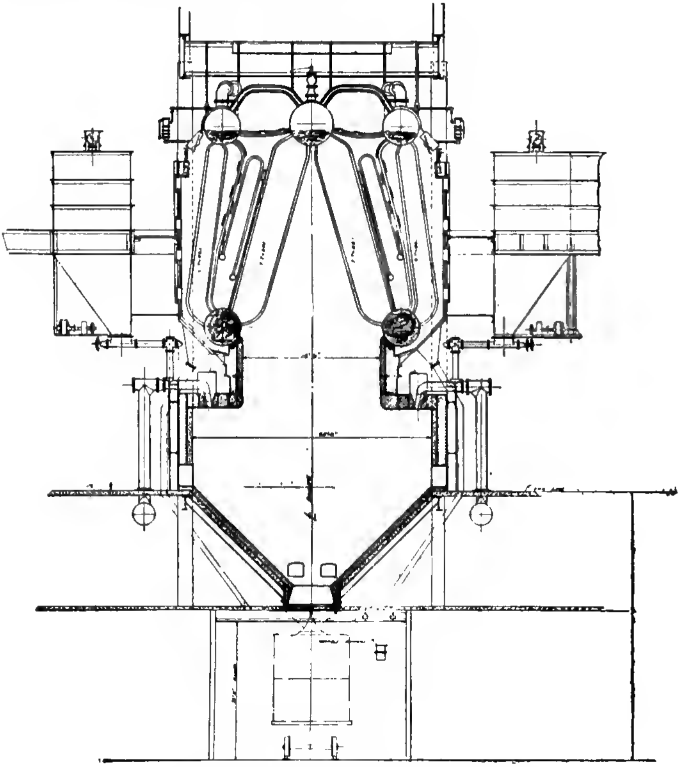

Fig. 109.—Fuller 2400 H. P. Sterling Boiler.

2. The ability to take care of peak loads. In other words, a pulverized coal burning system is much more flexible than a stoker installation. Its flexibility approaches that of fuel oil or natural gas.

3. By throwing a switch the entire firing operation ceases; an advantage in case of accident or emergency.

4. Ash is in much better condition to handle. The ash is in the form of dust or slag depending upon the melting point. This helps to maintain constant furnace temperature as there are no interruptions in firing conditions on account of cleaning fires.

5. There are no grates to clinker, particularly after operating at a maximum rating.

6. Pulverized coal is fired dry, containing less than one per cent of free moisture, whereas coal burned on stokers may vary anywhere from one to ten per cent of free moisture as fired.

7. Considerably less excess air is used for complete combustion. This item is of *utmost* importance when making comparisons. Less excess air means less power for furnishing air supply, particularly where forced draft is used. With less excess air the stack losses are less. Lower grades of coal fired on stokers require more excess air as it is quite difficult for the oxygen to get in close contact with the combustible. An air supply, sufficient to furnish all the air for combustion, should be available although at times only fifty per cent of air need be injected into the furnaces with the coal, the balance being supplied by the induction of action of the burner or drawn in by the stack draft. The air going into the furnace should be under control to permit close regulation under all conditions of firing. Less draft is required for pulverized coal fired furnaces.

8. All combustible in the coal is consumed when it is burned in pulverized form, provided the furnace capacity it not exceeded. None of the combustible goes out into the ash pile and therefore fires are eliminated in the ash pile.

9. There is less corrosion from sulphur on the boilers due to less moisture in the coal as fired, therefore high sulphur coals can be burned more readily and without serious results.

10. With furnaces properly proportioned and with properly designed burning equipment, smokeless operation has been maintained indefinitely. This is due to complete

combustion of all the particles of coal before coming in contact with the cold surface of the boiler.

11. Less refractory troubles have developed due to more uniform furnace temperature conditions.

12. Getting up steam quickly: "In a 400 h.p. Rust boiler with cold setting, with feed water at about 130°, steam was raised to 150 lb. and the boiler cut into the line in 45 minutes. The boiler furnace in which this test was made was only figured for normal rating. The rapidity of firing with pulverized coal equals that of any other fuel."

The following tests have been made on boilers fired with pulverized coal. They will give a general idea of the results of pulverized coal firing:

OPERATING RESULTS—BOILERS—FIRED WITH PULVERIZED COAL

Boiler Type Rated h.p.	Stirling Water Tube 439
Location	U. Verde Ext. Min. Co., Verde, Ariz.
Test Duration of Run	6 days.
Ave. Steam Pressure	182.7 lb.
Average Temperature of Feed Water	200° F.
Average Temperature Flue Gases	405° F.
Steam Super-heated	67.4° F.
Coal	
Total Weight as Fired	435,365 lb.
Water	
Total Weight Fed to Boiler	3,398,014 lb.
Factor of Evaporation	1.12
Economy	
Water Evaporated from and at 212° F	8.73
B.t.u. Value 1 lb. Dry Coal	10,680 B.T.U
Efficiency	79.5%
Kind of Coal Used	Gallup.
Moisture Adherent	14%

OPERATING RESULTS—BOILERS—FIRED WITH PULVERIZED COAL

Boiler Type Rated h.p.	Babcock & Wilcox Longitudinal Drum Water Tubular 600
Location	Western Ave. Plant, Puget Sound Traction, Light & Power Co., Seattle, Washington.
Test Duration of Run	24 hours
Average Steam Pressure	114.8 lb.
Average Temperature of Feed Water	121° F.
Average Temperature Flue Gases	487.7° F.
Average Temperature in Furnace	2375° F.
Coal	
Total Weight as Fired	67,300 lb.
Per cent Moisture in Coal as Fired	1.59%
Total Weight Dry Coal Consumed	66,100 lb.
Per cent Ash in Dry Coal	16%
Water	
Total Weight Fed to Boiler	571,300 lb
Equivalent Evaporated from and at 212° F.	628,000 lb.
Factor of Evaporation	1.135
Horse Power	
Boiler h.p. Developed	758 B.h.p.
Percentage rated Capacity Developed	126%
Economy	
Water Evaporated per lb. Coal Fired	8.50 lb.
Water Evaporated per lb. Dry Coal Fired	9.33 lb.
Water Evaporated from and at 212° F	9.51
Water Evaporated per lb. Combustible	11.30 lb.
B.t.u. Value 1 lb. Dry Coal	11660 B.t.u.
Efficiency	78.95%
Kind Coal used	Issaquah
As Received	Screenings
Moisture Adherent	15.09%
Moisture Inherent	3.10
Volatile	39.07
Fixed Carbon	41.44
Ash	14.31
Sulphur	0.23

OPERATING RESULTS—BOILERS—FIRED WITH PULVERIZED COAL

Boiler Type Rated h.p.	Badenhausen Vertical Water Tube 504
Location.	British Columbia Sugar Refining Co., Vancouver, B. C.
Date	April 7, 1919
Test Duration of Run	6 hours
Average Steam Pressure	71 lb.
Average Temperature of Feed Water	177° F.
Average Temperature of Flue Gases	500° F.
Average Temperature in Furnace	2425° F.
Steam, Super-heated	10°–12° F.
Coal	
Total Weights Coal as Fired	16,824 lb.
Per cent Moisture in Coal as Fired	1.1%
Total Weights Dry Coal Consumed	16,639 lb.
Per cent Ash in Dry Coal	28.7%
Water	
Total Weight Fed to Boiler	122,345 lb.
Factor of Evaporation	1.068
Horse Power	
Boiler h.p. Developed	631 h.p.
Percentage Rated Capacity Developed	125%
Economy	
Water Evaporated per lb. Coal Fired	7.5 lb.
Water Evaporated from and at 212° F	8.04 lb.
Water Evaporated per lb. Combustible	8.92 lb.
B.T.U. Val. 1 lb. Dry Coal	9364 B.t.u.
Efficiency	83.3
Kind of Coal used	Vancouver Island Nanaimo
As received	Slack Bituminous
Moisture Adherent	10%
Volatile	32.8%
Fixed Carbon	37.7%
Ash	29.4%

OPERATING RESULTS—BOILERS—FIRED WITH PULVERIZED COAL

Boiler Type Rated h.p.	Heine Vert. Baffles 370
Location	Ash Grove Cement Co., Chanute, Kan.
Test Duration of run	25 days
Average Temperature of Feed Water	195.6° F.
Average Temperature of Flue Gases	523° F.
Coal	
Total Weight Dry Coal Consumed	Ave. per hr. 1307 lb.
Water	
Total Weight Fed to Boiler	Ave. per hr. 11,400 lb.
Equivalent Evaporated from and at 212° F.	Ave. per hr. 12,133 lb.
Factor of Evaporation	1.0643
Horse Power	
Percentage Rated Capacity Developed	95%
Economy	
Water Evaporated from and at 212° F.	9.2
B.t.u. Value 1 lb. Dry. Coal	11,435 B.T.U.
Efficiency	78.1%
Kind of Coal Used	Kansas.

BOILERS FIRED BY PULVERIZED COAL CAN BE SEEN AT ANY OF THE FOLLOWING PLANTS

M. K. & T. R. R., PARSONS, KAN.

8 250 h.p. O'Brien Water Tube Boilers. Kansas Coals.

PUGET SOUND TRACTION, LIGHT & POWER CO., SEATTLE, WASH.

4100 h.p. B. & W. Boilers, 200 per cent Rating. British Columbia Coal, also Issaquah Screenings.

UNITED VERDE EXTENSION MINING CO., VERDE, ARIZ.

2 439 h.p. Stirling Boilers, 150 per cent Rating. Gallup & Texas Coals.

GARFIELD SMELTER CO., GARFIELD, UTAH.

2 350 h.p. Stirling Boilers, 150 per cent Rating. Montana Coal

BRITISH COLUMBIA SUGAR REFINING CO., VANCOUVER, B. C.

2 500 h.p. Badenhauser Boilers.
2 250 h.p. B. & W. Boilers, 150 per cent Rating.
9 150 h.p. Return Tubular Boiler.
(Others being equipped.)

SIZER FORGE CO., BUFFALO, N. Y.

5 250 h.p. Rust Boilers. Utilize Waste Heat from pulverized coal.
Fired Forge Heating Furnaces.

INLAND STEEL CO.

1 250 and 3-300 Heine Boilers.

SUSQUEHANNA COLLIERIES, LYKENS, PENNA.

1 250 h.p. Babcock & Wilcox Boilers. Using straight pulverized anthracite

NEW POWER HOUSE AT LYTLE.

6 333 h.p. Babcock & Wilcox Boilers. Using straight anthracite.

The above boilers are all using the Fuller Engineering Company System.

COMPARISON OF SAVINGS BETWEEN STOKERS AND POWDERED COAL

The following data are from an actual boiler plant located in Canada, used in connection with a paper mill:

Amount of Fuel used per day:

Maximum—300 tons	(2000 lb.)
Minimum—180 tons	

Analysis of Fuel:

Fixed Carbon	56.2
Volatiles	28.0
Sulphur	2.6
Ash	11.0
Moisture	2.2
B.T.U.	12913 as received.

Cost of Coal delivered at plant.................................. $7.23 which is the average for 1918, this to be reduced to $6.00 per ton of 2000 lb. Electricity available—550 V. Alt. Curr. 62¼ Cycle cost of $20.00 per k.w. year.

Labor Costs:

Firemen	41 cents per hour.
Ashmen	38 cents per hour.
Coal unloaders	40 cents per hour.
Coal tenders	38 cents per hour.

Number of Men Employed:

22 Firemen each working	8 hours.
9 Ashmen each working	8 hours.
3 Coal Tenders each working	8 hours.
8 Coal Unloaders each working	9 hours.

Boiler Data:

Number 16	6 B. & W. at 375 h.p. 9 Cahall at 250 h.p. 1 Edgemoor 400 h.p.

Total Horsepower equals 4900 h.p.
Percentage or Rating normally developed 110%.
Kinds of Stokers—Side-Feed.
Arrangement of Baffles—vertical (B. & W., Edgemoor).
Stacks—Size 10′ 6″ I. D.—200 ft. for 6 B. & W.
Size 10′ 0″ I. D.—200 ft. for Cahall & Edgemoor.
Average Draft at uptakes 0.65″ approximately.
Present Average Equivalent Evap. per lb. of coal as received equals 8.48 lb.
Stack Temperature B. & W. 540° F.
Cahall 350° F. with economizers
Average CO equals 9 to 10%.

With the above data on hand the author made out the following comparison of costs for their consideration. These figures were checked as correct, and the company is at present making experiments in an entirely new design of combustion chamber to burn powdered coal before installing a complete system in this plant.

From data submitted, the estimated requirements per day are as follows:

Coal:			
Average 240 tons per day at $6.00			$1440.00
Labor:			
22 Firemen	@ $.41 × 8 × 3 turns	$216.48	
9 Ashmen	@ .38 × 8 × 3 "	82.08	
3 Coal tenders	@ .38 × 8 × 3 "	27.36	
8 Coal unloaders	@ .40 × 24 hrs	76.80	
			402.72
Power:			
Cost to run stokers (estimated)			98
Repairs and supplies			3.30
Total daily operating cost			$1847.00

With powdered coal we estimate your daily requirements to be as follows:

Coal:			
6 B. & W.	boilers	@ 375 h.p.	2250 h.p.
9 Cahall	"	@ 250 h.p.	2250 h.p.
1 Edgemoor	"	@ 430 h.p.	400 h.p.
Total horsepower			4900 h.p.
Rating normally developed			110%

$\frac{4900 \times 110 \times 3\frac{1}{2}\# \times 24}{2000}$ equals 226 tons of coal per day

226 tons @ $6.00			$1356.00
Labor:			
In powdered coal plant.			
1 Operator	@ $.41 per hr. × 24 hrs	$9.84	
2 Assistants	@ .38 per hr. × 24 hrs	18.24	
1 Coal unloader	@ .40 per hr. × 24 hrs	9.60	
			37.68
In Boiler room:			
8 Firemen	@ $.41 × 8 × 3 turns	78.72	
6 Ashmen	@ .38 × 8 × 3 turns	54.72	
			133.44

Power:	
226 tons × 40 k.w. hrs. × $.0028	25.31
Repairs and supplies—(estimated)	7.57
Total daily operating cost	$1560.00

Present daily operating cost	$1847.00
With powdered coal	1560.00
Savings per day	$287.00

$287 × 310 days equals $88,970 saved per year by the installation of powdered coal.

Cost of pulverizing equipment to supply powdered coal for the above boilers is approximately as follows:

A 10 ton per hour capacity pulverized plant would be required.

Powdered coal equipment (Holbeck System) consisting of track hopper, duplex feeder, coal crusher, belt conveyor, magnetic separator, centrifugal discharge bucket elevator, screw conveyor, 600 ton capacity crushed coal storage bunker, belt conveyor, automatic scale, dryer, dried coal bins, by-pass screw conveyors, spur gear reducers, outlet feeder boxes, feed screws, distributing blowers in parallel with by-pass connections, distributing piping, valves, branch-piping, operating devices and burners, including return line back to coal plant:

The above would cost	$100,000
Electric motors required—about 400 h.p.	8.000
Building including foundations	12,000
Steel and masonry supports	4,000
Secondary air system	4,000
Changes in boiler furnaces	5,000
Erection	5,000
Total estimated cost	$138,000

Assume fixed charges as 15 per cent of the total cost of $138,000 which equals $20,700, including taxes, interest, depreciation and insurance.

As the savings amounted to $88,970, which included all operating charges, deducting the fixed charges $20,700 from $88,970 leaves net saving of $68,270 per year, which, as can be readily seen, is just about 50 per cent return on the total investment of $138,000.

Or, in another way; by data submitted it is shown that by operating the boiler plant with stokers, it is costing $1847 per day × 310 equals $572,570 per year, which is the amount to be spent next year to operate the plant. At the end of the year there will be nothing to show for such an expenditure of money, but the same old equipment to go ahead with and do the same thing the following year.

Whereas, spending an amount of $138,000 there can be deducted after a year's operation a saving of $68,270 from the present operating charges of $572,570.

MARINE BOILERS

Fig. 110 shows a typical arrangement designed for Marine Boilers.

The novel idea of this arrangement lies in the automatic feed of coal to the pulverizer controlled by the motor.

The exhausters exhaust the pulverized coal from the air separators of the pulverizers and discharge it into the distributing pipe system; the coal dust is discharged into the boilers through branches having a control valve placed close to the main, and the coal dust which has not been used at the boilers is carried by the return line back to the pulverizers.

If two much coal dust is returned back to the pulverizers, overloading them, the connection at the motor will automatically slow up the speed of the motor and of the pulverizer until the requirement of the distributing system equalizes itself with the delivery of the coal dust from the exhausters.

All that would be necessary on ship would be crushed coal with a small content of moisture and as the required

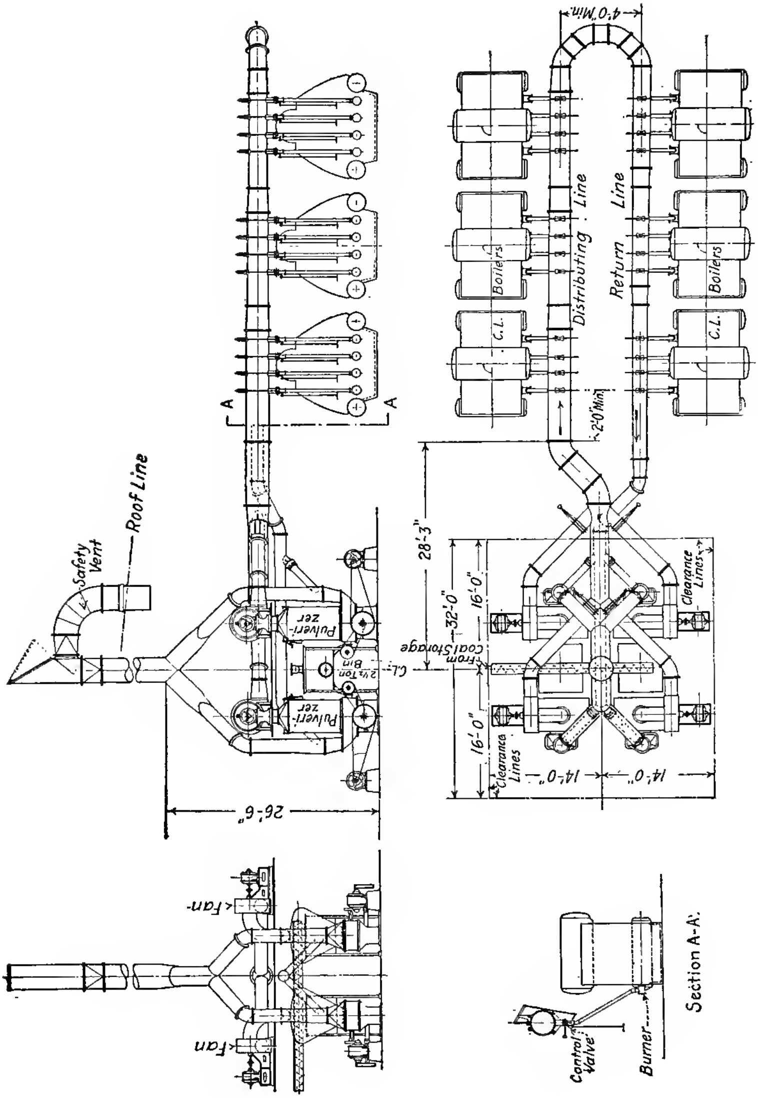

FIG. 110.—Marine Type Boilers.

amount of coal would be from 25 to 50 per cent less than with hand firing, besides eliminating labor to a large extent, the savings are easily apparent.

Fig. 111 shows the application of powdered coal to a waste heat boiler utilizing the waste gases from a copper smelting furnace.

BOILERS AT THE MILWAUKEE ELECTRIC RAILWAY AND LIGHT COMPANY

This plant is the first central station in the United States to be equipped and successfully operated with pulverized fuel. They have five 468 h.p. Edgemoor boilers equipped with the "Lopulco" system.

The essential features of this system are, briefly:

1. Naturally or mechanically induced draft in sufficient volume to take care of the products of combustion under peak load conditions and under sufficient head to produce .25 in. vacuum in the combustion chamber and provide for the friction loss through the boiler to the stack damper.

2. Means of controlling stack damper to maintain constant draft condition in the combustion space.

3. The introduction of pulverized fuel at low velocity.

4. Openings to the atmosphere for the induction of air for combustion purposes and for cooling purposes under the zone normally filled with the flame of combustion.

5. An ash settling space removed from the zone of combustion a sufficient distance to prevent melting and the formation of slag.

Fig. 112 shows the interior of this station. The firing controls are shown in the right foreground.

Fig. 113 shows a sectional arrangement of the plant and the combustion chamber. Practically no change was made in the settings of these boilers other than the addition of the mixing oven furnace shown on the front. Combined efficiencies as high as 85.22 per cent have been obtained in this plant. Regular operation, with no attempt to make

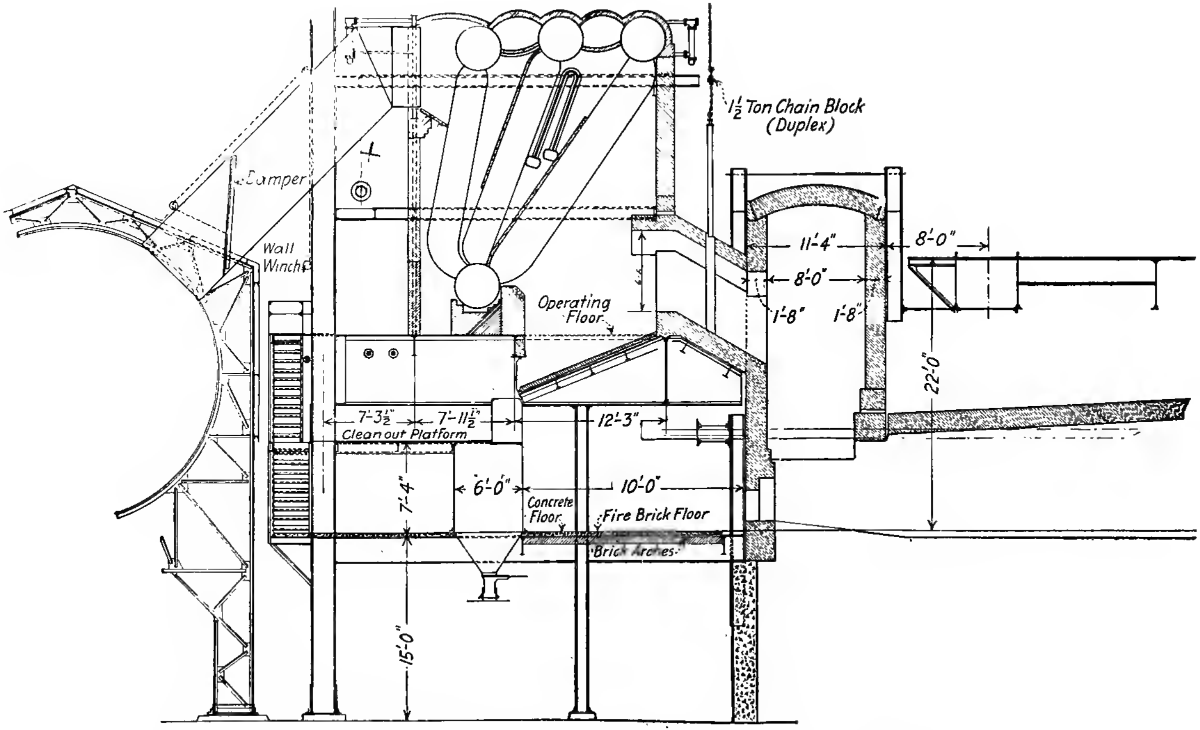

FIG. 111.—Waste Heat Boiler Utilizing Gases from a Pulverized Coal Fired Copper Furnace.

a change in normal operating condition was observed for a period of four days, from November 11th to 15th, 1919, when an average combined efficiency at 80.67 per cent was obtained for this period. Charts herewith covering CO_2, steam and stack temperatures, and the draft conditions, indicate the regularity of operation that may be obtained when using powdered coal. This plant has been in operation since 1917 and has had no interruption during this time attributable to any of the pulverizing equipment. Refractories costs have been less than with stokers. The costs

Fig. 112.—Oneida Street Plant of the Milwaukee Electric Railway & Light Co.

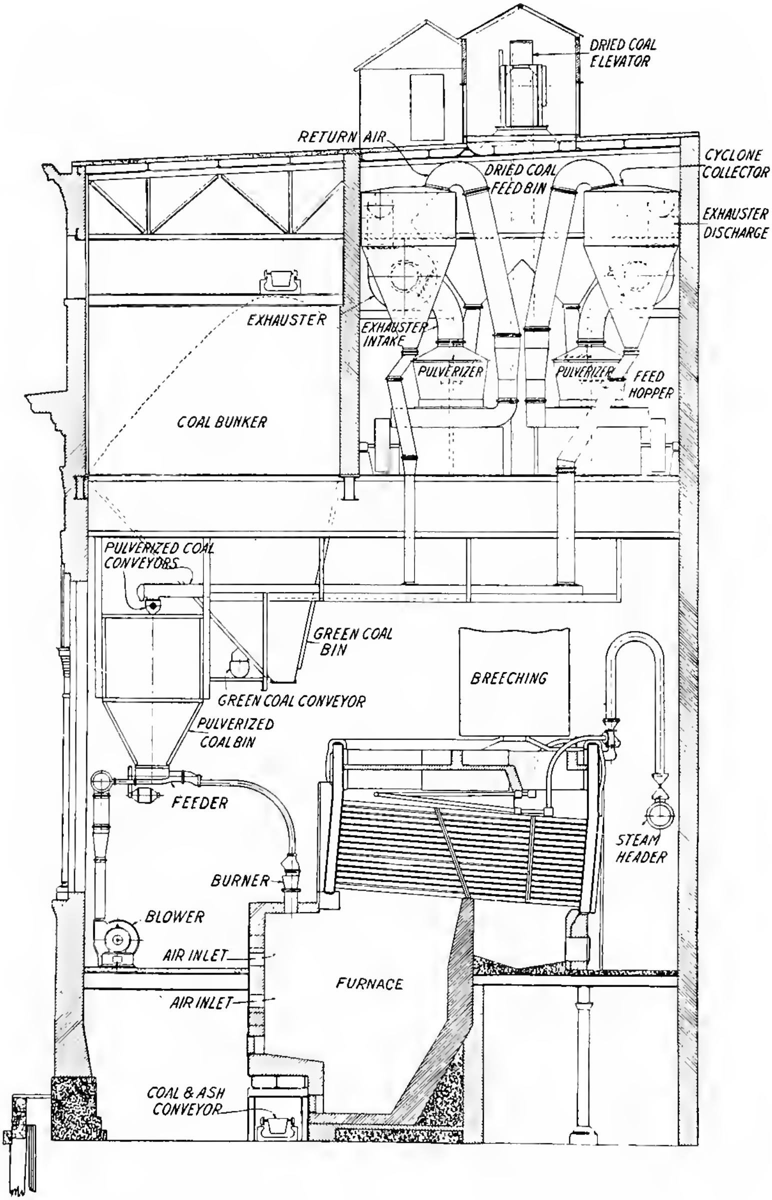

Fig. 113.—Sectional Arrangement of the Oneida Street Plant.

of preparation, as given by Mr. Anderson, chief power plant engineer, are as follows:

Cost of labor per ton coal, operation	.143
Cost of fuel for drying plus fuel for electric energy, coal at $4.00 per ton	.119
Cost of lubricants per ton of coal, grease at 9 cents per lb.	.007
Cost of labor per ton of coal, maintenance	.036
Cost of material—maintenance	020
Total cost per ton of coal	.325

Mr. Anderson further states:

"Continuous boiler operation at a uniform rating, as well as constant efficiency, is made possible. At no time is there a loss due to clinkering of coal on the grates or cleaning of fires. Irregularities, due to quality and variation in the size of coal from high percentages of slack to high percentages of lump, such as the stoker firemen cannot successfully cope with, are eliminated in pulverized fuel practice. Heavy overloads can be taken on or dropped off in a very short time, through the adjustment of the coal feeder screws and furnace drafts. Ash handling and hauling costs are reduced to a minimum because of reduced volume. Banking conditions in pulverized fuel operation differ materially from those of stoker operation. In banking, the fuel feed can be entirely eliminated and all dampers and auxiliary air inlets closed so that only radiation losses can occur as against combined stack, radiation and grate losses in a bank of the stoker."

Much discussion is being indulged in at the present time regarding dust from boiler plants equipped with powdered coal. It is quite true that perhaps 60 per cent of the ash goes up through the stack. This ash is of such light flocculent nature that it is dissipated over a wide area before percipitation occurs and no trouble can be expected from this source, although the amount of tonnage put out through the stack per day seems great. This is proven by the "Lopulco" installation at Milwaukee where, after a period of two years' operation, although the plant is located in the heart of the business district of Milwaukee, no complaint has been heard from this source and no evidence of any ash or dust can be found on the roofs of any of the buildings in the vicinity. It is quite possible that this dust is of such fineness and such a nature that it is not precipitated until it encounters moisture. (Fig. 114 shows an interesting comparison.)

Fig. 114*a*.—Micro-photograph of soot, ash, cinders and mineral debris emitted from smoke stack of a boiler burning coal on grates or in retorts.

Fig. 114.—Micro-photograph of ash from pulverized coal collected in chamber of stationary boiler.

The table below gives a record of a banking period at Milwaukee. Their usual custom is to float the boiler on the line when not in service. A "Lopulco" equipped boiler can be banked for a period of fifteen hours with a loss of approximately 50 lb. pressure.

LOG DURING BANKED TIME, ONEIDA STREET PLANT OF MILWAUKEE ELECTRIC RAILWAY AND LIGHT COMPANY USING "LOPULCO" SYSTEM

Date	August 18–19, 1918
Boiler No. 5	**Edgmoor rated 468 nominal h.p.**
Fuel feed shutoff, uptake damper closed and auxiliary air inlets closed	9:00 p.m.
Boiler steam outlet to header closed and 175 pounds steam on boiler	9:20 p.m.
Safety valves released about one (1) minute	9:40 p.m.
" " " " " " "	9:55 p.m.
" " " " " " "	10:08 p.m.
" " " " " " "	10:15 p.m.
" " " " " " "	10:25 p.m.
" " " " " " "	10:38 p.m.
" " " " " " "	10:43 p.m.
" " " " " " "	10:52 p.m.
" " " " " " "	11:02 p.m.
" " " " " " "	11:09 p.m.
" " " " " " "	11:18 p.m.
" " " " " " "	11:28 p.m.
" " " " " " "	11:38 p.m.
" " " " " " "	11:48 p.m.
" " " " " " "	11:52 p.m.
Steam on boiler 155 pounds when fuel feed started and boiler steam outlet to header opened	7:00 a.m.
Drop of steam pressure in boiler, from 9 p.m. until 7 a.m., or during ten hours while fuel feed was off and during which time safety valves popped 15 times, for one minute each, or a total of about fifteen minutes	20 pounds

Time required to bring boiler from 155 pounds to 175 pounds—4 minutes.

Boilers at the plant of the Lima Locomotive Works:

This plant has six Wickes boilers of 400 h.p. capacity each and one Heine boiler of 580 h.p. capacity equipped with the "Lopulco" system. Figures are not available as to the efficiencies or capacities, but the operation has been satisfactory in every way.

Fig. 115 shows a "Lopulco" feeder as used at Lima Locomotive Works.

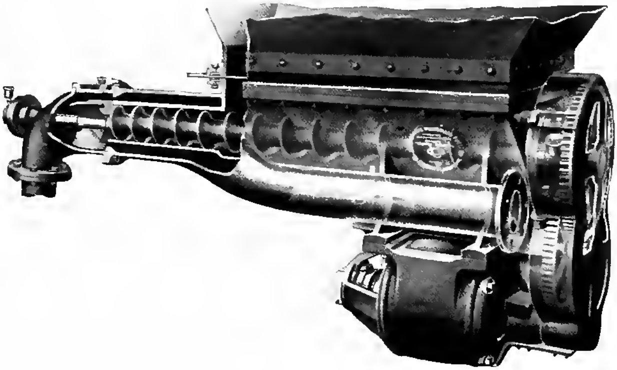

FIG. 115.—Lopulco Feeder as used at the Lima Locomotive Works.

Fig. 116 shows a "Lopulco" burner as used at Lima Locomotive Works.

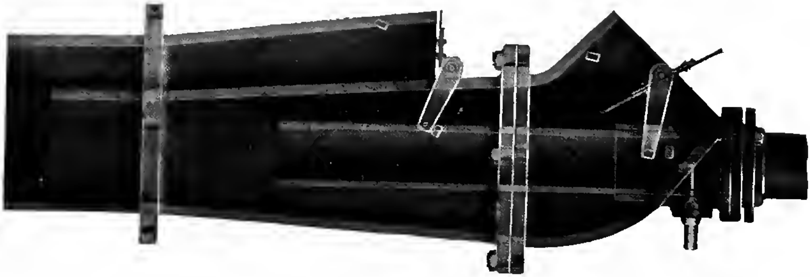

FIG. 116.—Lopulco Burner as used at the Lima Locomotive Works.

Fig. 117 shows a Wickes boiler.

Fig. 118 shows a Heine boiler.

FIG. 117.—Wickes Boiler

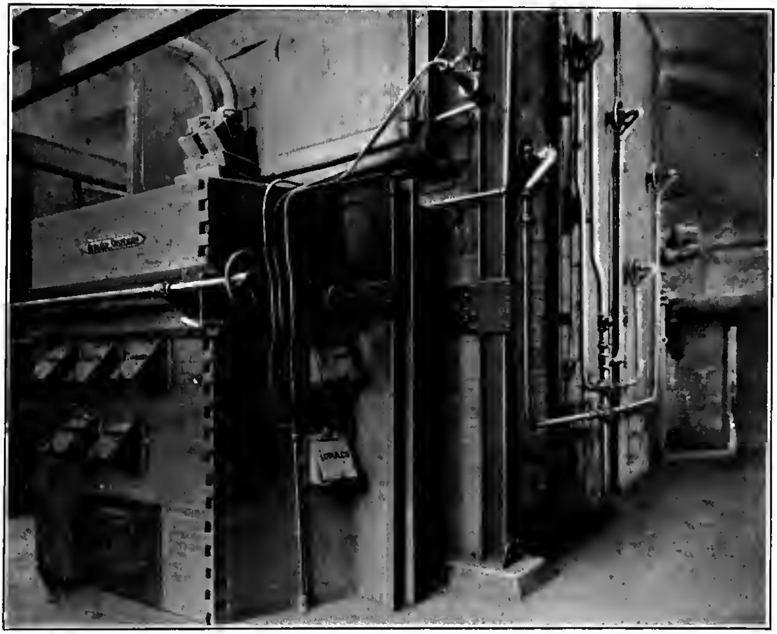

FIG. 118.—Heine Boiler.

Morris and Company at Oklahoma City have seven Edgemoor boilers equipped with the "Lopulco" system. These boilers are in daily operation using McAllister coal. An interesting feature of this installation is the fact that the boilers are equipped to burn either powdered coal, fuel oil, or natural gas. Mr. T. Oderman, their Mechanical Engineer, states that the change from one to the other can be made in about twenty minutes' time as there is no change other than shifting from one type of burner to another. An interesting comparison is furnished from this plant by their statement that with coal at $3.75 per ton alongside, and fuel oil at 90c. per barrel alongside, they find it more economical to use their "Lopulco" system.

FIG. 119.—Morris and Co. Oklahoma City Power Plant.

Allegheny Steel Company at Brackenridge have two heating furnaces equipped with the "Lopulco" system, as well as ten Wickes boilers of 333 h.p. each.

Fig. 120 shows the installation of a "Lopulco" furnace on the Allegheny Wickes boilers. These boilers have been

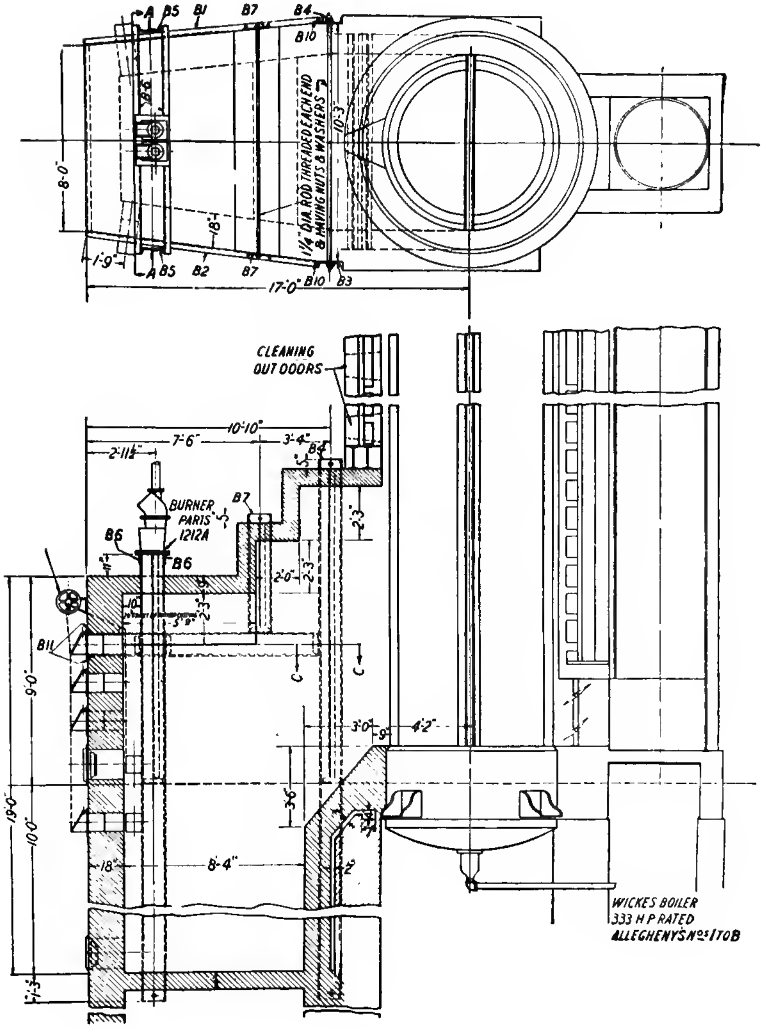

FIG. 120.—Allegheny Steel-Wickes Boilers.

operated continuously at an average rating of 265 per cent for long periods.

A "Lopulco" system is being installed at the plant of the Ford Motor Company on four, 2640 h.p. each, Ladd boilers. These boilers are to operate at a continuous rating of 250 per cent, with a peak load capacity of 400 per cent—without economizer.

The "Lopulco" system as applied to heating furnaces is radically different from the "Lopulco" system as applied to boilers inasmuch as the boiler system uses induced draft, either mechanical or natural, whereas in metallurgical furnaces the system is a pressure system.

Recent Application to Locomotive Boilers

EXHIBIT "A"

New York Central Ten-Wheel Freight Locomotive Number 2147. Tractive Power 31,000 Pounds

An existing locomotive equipped for experimental purposes from June, 1914, to October, 1916, with "Lopulco" pulverized fuel system.

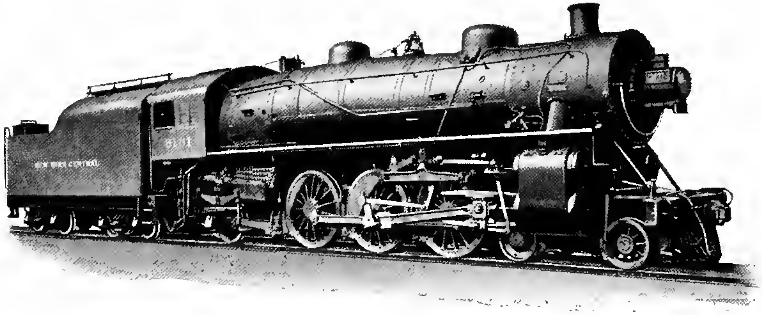

Fig. 121.—New York Central Pacific Type Locomotive No. 3131 Equipped with "Lopulco" System in Main-line Passenger and Freight Service.

In road freight service between West Albany and Utica and Syracuse, N. Y., on runs of from 91 to 138 miles one way.

Pulverized fuel supplied from American Locomotive

Company, Schenectady Works, and from Atlas-Portland Cement Co., Hudson N. Y. Works.

The following table shows typical performance:

Item.	Pulverized		
	1 Bituminous	2 Bituminous.	3 Bituminous.
Fuel			
Fineness, proportion through 200 mesh	0.85	0.85	0.85
Moisture, per cent	0.40	0.81	0.59
Volatile, per cent	24.72	36.27	24.36
Fixed carbon, per cent	69.43	58.29	65.05
Ash, per cent	6.85	5.44	10.59
Sulphur, per cent	1.96	0.68	0.84
B.T.U. per pound of coal	14,739	14,334	13,912
Miles run, total	1,324	1,426	398
Cars per train, average	61	65	60
Adjusted tonnage per train, average	1,719	1,808	1,750
Speed when train was in motion, miles per hour, average	26	25	24
Boiler pressure when using steam, (200 pounds) average	198.30	193.50	194.00
Front-end draft when using steam, in. of water, average	7.15	7.79	6.69
Firebox draft when using steam, in. of water, average	3.50	3.22	3.18
Temperature of steam, degs. Fahr.	562	573	555
Coal fired per hour of running time, pound average	3,275	3,063	3,457
Adjusted ton miles per pound of coal, average	12.84	13.97	11.59

The locomotive was worked at its maximum capacity on all trips, about 10 per cent more tonnage being hauled than is usual for like locomotives burning coal on grates, and at practically fast freight schedule speed. The exhaust nozzle opening was about 25 per cent larger than the maximum for hand-firing.

The general results were excellent, particularly as regards tonnage, speeding, combustion and steam pressure, the latter being maintained at full speed with injector supplying the maximum amount of water to the boiler.

With the highest sulphur coal (No. 1) and the highest ash coal (No. 3), there was less than 1 cu. ft. of slag in the slag box at the end of each run and practically no collection of ash or soot on the flue or firebox sheets. In fact, with No. 3 fuel there was less than two handfuls of slag, ash and soot collected on each trip.

EXHIBIT "B"

Delaware & Hudson Consolidation Freight Locomotive Number 1200

Tractive Power from 61,400 to 64,000 Pounds

A newly built locomotive equipped for experimental purposes from March, 1916, to August, 1917, with "Lopulco" pulverized fuel system.

In road freight service between Carbondale and Plymouth, Pa., and Oneonta, N. Y., on runs of from 37 to 94 miles one way.

Pulverized fuel supplied from Hudson Coal Company's stationary boiler experimental pulverizing plant at Oliphant, Pa.

The locomotive was designed for a working steam pressure of 195 lb., but the boiler was designed to carry 215 lb. steam pressure. With 195 lb. working pressure the cylinder horsepower rating is 2368 and the boiler horsepower rating is 2540.

Pulverized fuel tests were made with the following adjustments:

Adjustment	Boiler Pressure, lbs.	Tractive Power, lbs.	Factor of Adhesion	Results.
Originally	195	61,400	4.36	OK
First change	200	63,000	4.24	OK
Second change	205	64,600	4.14	OK
Third change	210	66,200	4.03	OK

The raw coal which was supplied for these tests analyzed about as follows:

Content.	Anthracite Slush.	Anthracite Bird's-eye.	Bituminous Slack.
Moisture	14.96	....	7.28
Volatile-dry	6.95	6.75	29 47
Ash-dry	23.67	75.23	57.21
Total	100.00	100.00	100.00
Calculated B.T.U	11,800	12,600	13,700

This raw coal was mixed in the proportion of 60 per cent anthracite and 50 per cent bituminous which, after drying and pulverizing, produced a fuel of from 15 to 20 per cent volatile content which was entirely satisfactory for locomotive purposes and the production of an average of one boiler horsepower for each 1.4 sq. ft. of combined fire box and tube heating surface.

Dynamometer car tests conducted to determine sustained pulling capacity on heavy grades and at starting gave the following results:

Maximum Dynamometer Drawbar Pull In Pounds.	Speed Miles per Hour.	Reverse Lever Cut-off Per cent.	Throttle Opening Per cent.	Boiler Pressure Pounds.	Grade on Line Per cent.
64,000	At start	Full	75	200	1.65
59,000	6	66	Full	205	1.65
58,000	8	66	Full	205	0.72
56,000	10½	66	Full	205	0.72

During these tests a fuel mixture of 60 per cent anthracite bird's-eye and 40 per cent bituminous slack was used and the apparent evaporation ranged from 7.3 to 9.3 lb. of water per lb. of coal consumed. The lb. of coal fired per 1000 ton miles averaged 202.

In heavy tonnage service runs—over ruling grade of from 0.72 to 1.65 per cent—for a distance of 37 miles, the following data show typical performance:

Item.	Trip No. 1.	Trip No. 2.
Miles run.	37	37
Speed—average miles per hour	14.5	13.1
Ton miles—actual	83.147	85.758
Ton miles—adjusted	88.553	90.113
Coal consumed per 1000 ton miles	186	202
Steam pressure-average pounds	199	200

When in heavy mine-run service between Carbondale and Plymouth, Pa. for the three months' period, March, 13th, to June 12th, 1917, the performance of the 1200 was as follows:

Period.		Days in Road Service.	Hours in Road Service.
From	To		
1917	1917		
March 13th	April 12th	28	301 hours 3 minutes
April 13th	May 12th	27	301 hours 30 minutes
May 13th	June 12th	25	273 hours 10 minutes
Total		80	875 hours 43 minutes

After the day's work the locomotive would, upon arrival at Carbondale engine terminal, be run directly into the house, no fire, track or ashpit delays or work being required.

EXHIBIT "C."

ATCHISON, TOPEKA & SANTA FÉ MIKADO FREIGHT LOCOMOTIVE NUMBER 3111

TRACTIVE POWER, 59,600 POUNDS

An existing locomotive equipped for experimental purposes from May, 1917, to July, 1918, with "Lopulco" pulverized fuel system.

In road freight service between Fort Madison, Iowa, and Marceline, Mo., on runs of 112.7 miles one way. Ruling grades 0.8 per cent compensated.

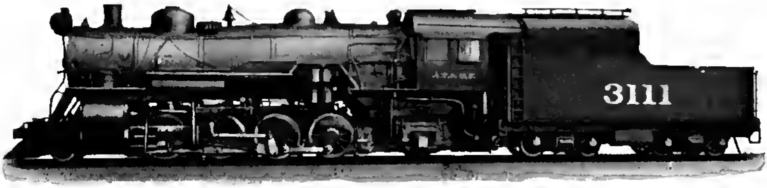

FIG. 122.—Atchison, Topeka & Santa Fé Mikado Type Locomotive No. 3111, Equipped with "LOPULCO" System—Operated in Main-line Fast Heavy Freight Service.

Pulverized fuel was supplied from the company's experimental pulverizing plants at Fort Madison, Iowa, and Marceline, Mo.

Dynamometer car tests were run with the following average results using Frontenac, Kans., run-of-mine bituminous coal, averaging, in analysis, when pulverized:

Moisture	1.05%
Volatile	32.67%
Fixed Carbon	51.57%
Ash	14.71%
Sulphur	3.95%
B.T.U	12,022%
Per cent through 100 mesh	97.8%
Per cent through 200 mesh	82.6%

FIG. 123.—Atchison, Topeka & Santa Fé Mikado No. 3111 being supplied with Pulverized Fuel from "LOPULCO" Fuel Preparing and Disbursing Plant at Fort Madison, Iowa.

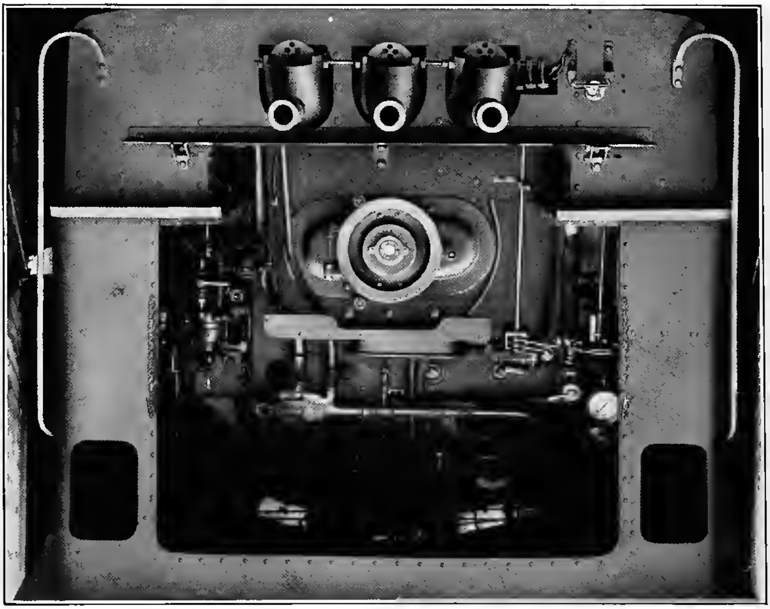

FIG. 124.—Rear end of Locomotive, Equipped with Triple Burner "LOPULCO" System Burners and Fuel Control Mechanism.

The general performance of the locomotive equipped with "Lopulco" pulverized fuel system was as follows:

Item.	Total.
Date of runs	March 4th to March 22, 1918
Total trips run (112.7 miles)	14
Total miles run	1578
Total running time	5 hours 6 minutes.
Speed, miles per hour	22.3
Train tonnage	2278
Gross per 1000 gross ton miles	256.5
Coal per 1000 gross ton miles	82.4
Water per 1000 gross ton milcs	566
Boiler pressure	188
Feed-water temperature	48
Flue gas temperature	553
Smoke draft—inches	11.3
Firebox draft—inches	1.3
Quality of steam	96.0
Superheated steam—Fahrenheit	223°
Pounds of coal per hr. of running time per equivalent sq. ft. of grate area	71.3
Pounds of coal per hour of running time per sq. ft. of boiler heating surface	1.01
Fuel Performance	
Equivalent evaporation per pounds of water from and at 212° F. per lb. of coal for boiler and superheater	9.22
Boiler horsepower for boiler and superheater	1115
Thermal efficiency for boiler	65.5
Thermal efficiency for boiler and superheater	74.5
Thermal efficiency for boiler and locomotive	4.19

An actual evaporation (not corrected for the quality of steam) showed at the rate of 8.46 lb. per sq. ft. of boiler surface.

The combined boiler and superheating efficiency showed a gain of 23.2 per cent for pulverized fuel as compared with hand-firing.

Based on the hand-firing performance, the use of pulverized fuel showed a saving of 22.3 per cent in fuel.

The combustion with pulverized fuel firing was practically smokeless.

The pulverized fuel operating mechanism gave no trouble.

CHAPTER XIII

TABLES AND USEFUL DATA

NOTE.—In the following data the conditions assumed are, temperature 600° F. with barometer at 30 in. In practice, 10 to 20 per cent more air should be provided because of the imperfect mixture with the fuel. Further corrections should be made for temperatures in hot climates, also for pressures in high altitudes.

Air.—By weight consists of 23 per cent oxygen and 77 per cent nitrogen, or by volume, 20.7 per cent oxygen and 79.3 per cent nitrogen. One pound under normal conditions occupies 13 cu. ft. and 56 cu. ft. contain one pound of oxygen.

Oxygen, O.—One pound occupies 12 cu. ft. According to Welter's theory, any material burned with 1 lb. of oxygen evolves 7560 B.T.U.

Carbon, C.—One pound requires for complete combustion, 2.66 lb. of oxygen or 11.6 lb. air or about 150 cu. ft. of air. If perfect combustion takes place, 12,610 effective B.T.U. may be realized with the escaping flue gases at 600° F. If insufficient oxygen is furnished, carbon monoxide will be formed. If too much air is furnished, the effective B.T.U. will be decreased by being carried away with the escaping flue gases.

Carbon—Monoxide, CO.—One pound occupies 13.5 cu. ft. and requires .571 lb. of oxygen or 32 cu. ft. of air for its combustion and evolves 4320 B.T.U. With perfect combustion and escaping flue gases at 600° F., 3.820 effective B.T.U. may be realized. One cu. ft. requires 2.4 cu. ft. of air for combustion and evolves 320 B.T.U.

Hydrogen, H.—One pound occupies 180 cu. ft. and requires 8 lb. of oxygen or 450 cu. ft. of air for its combustion and evolves 60,480 B.T.U. when burned to liquid water, 42,000 B.T.U. may be realized with flue gas at 600° F. One cu. ft. of hydrogen gas requires 2.33 cu. ft. of air for its combustion and evolves 324 B.T.U.

Sulphur, S.—One pound requires 1 lb. of oxygen or 56 cu. ft. of air for its combustion and evolves 4000 B.T.U. exclusive of the heat required for volatilization of the sulphur. With perfect combustion and flue gases at 600° F., 3260 B.T.U. may be realized.

Coal.—One pound requires approximately 250 cu. ft. of air for its combustion. There is so wide a variation in its properties that no further statement will be given here.

Natural Gas.—One pound occupies 22 cu. ft., or 1000 cu. ft. weighs 45 lb. One cu. ft. requires 10 cu. ft. of air of its combustion and evolves about 1000 B.T.U.

Artificial Gas.—One pound occupies 22 cu. ft., or 1000 cu. ft. weighs 45 lb. One cu. ft. requires 7 cu. ft. of air for its combustion and evolves about 600 B.T.U.

Oil.—(Beaumont) Specific gravity .92, weight 7.66 lb. per gallon. One lb. requires 15 lb. of air for complete combustion and gives about 20,000 B.T.U. One gallon requires 1500 cu. ft. of air.

Heat.—Evolved by the combustion of any organic fuel such as coal, is approximately that of its carbon plus that of as much of its hydrogen as exceeds the amount required to combine with its oxygen to form water.

Example.—If a fuel consist of 87 per cent C, 5 per cent H, and 8 per cent O, the 8 per cent of O will be sufficient to combine with 1 per cent of H, leaving 4 per cent H available for combustion. The B.T.U. to be derived from 1 lb. of this fuel will then be that corresponding to .87 lb. C plus .04 lb. H.

HEATS OF COMBUSTION OF VARIOUS SUBSTANCES IN OXYGEN

One Part by Weight of	Burning To	Kilo Calories Evolves.	B.T.U. Evolves.
Hydrogen..............	Water at 0° C.	34,462	62,032
Hydrogen..............	Steam at 100° C.	28,732	51,717
Carbon (wood charcoal).	CO_2	8,080	14,544
Carbon................	CO	2,473	4,451
Carbon Monoxide.. ..	CO_2	2,403	4,325
Marsh Gas, CH	CO_2 and H_2O	13,063	23,513
Olefiant Gas...........	CO_2 and H_2O	11,858	21,344

SPECIFIC HEATS OF SUBSTANCES

Solids and Liquids

Glass..........	.1937	Coal........	.20 to .24	Copper......	.0951
Cast iron......	.1298	Coke..............	.203	Charcoal....	.2410
Wrought iron.	.1138	Brickwork Masonry	.20	Mercury ...	.0333
Steel, soft......	.1165	Wood.......	.46 to .65	Water.	1.0000

Chemical Equations for Combustion in Oxygen

Hydrogen, H

$$2H_2 + O_2 = 2H_2O$$

Relation by volume—(2 vols.) + (1 vol.) = (2 vols.)
Relation by weight— 1 8 = 9

Carbon Monoxide, Co.

$$_2CO + O_2 2CO_2$$

Relation by volume—(2 vols.) + (1 vol.) = 2 vols.
Relation by weight — 7 + 4 = 11

Olefiant Gas, C_2H_4

$$C_2H_4 + 3O_2 = 2CO_2 + 2H_2O$$

Relation by volume—(1 vol.) + (3 vols.) = (2 vols.) + (2 vols.)
Relation by weight — 7 + 24 = 22 + 9

Marsh Gas, CH_4

$$CH_4+2O_2=CO_2+2H_2O$$

Relation by volume—(1 vol.)+(2 vols.)=(1 vol.)+(2 vols.)
Relation by weight — 4 + 16 = 11 + 9

One cubic foot of Hydrogen at 32° F. and 14.7 lb. per sq. in. equals .00599 lb. To find the weight of any other gas per cubic foot, multiply half its molecular weight by .00599.

HEATING VALUES OF FUEL

Peat, Irish, perfectly dried, ash 4 per cent	10,200 B.T.U.
Peat, air-dried, 25 per cent moisture, ash 4 per cent	7,400 "
Wood, perfectly dry, ash 2 per cent	7,800 "
Wood, 25 per cent moisture	5,800 "
Tan bark, perfectly dry, 15 per cent ash	6,100 "
Tan bark, 30 per cent moisture	4,300 "
Straw, 10 per cent moisture, ash 4 per cent	5,450 "
Straw, dry, ash 4 per cent	6,300 "
Lignites	10,000 "

The above are approximate figures for on such materials qualities are very variable.

ANALYSIS OF FUELS

	Water.	Volatile Matter.	Fixed Carbon.	Ash.	Sulphur.
Anthracite (mixed)	3.40	3.80	83.80	8.40	.60
Semi-bituminous	1.00	20.00	73.00	5.00	1.00
Bituminous	1.20	32.50	60.00	5.30	1.00
Lignite	22.00	32.00	37.00	9.00	
Coke	....	....	89.00	10.00	.80
	Carbon.	Hydrogen.	Oxygen.	Nitrogen.	Ash.
Wood, dry	50.0	6.0	41.0	1.0	2.0
Charcoal	75.5	2.5	12.0	....	1.0
Peat, dry and ash free	58.0	5.7	3.0	1.2	

USEFUL CONSTANTS FOR CONVERSION

Length

British — Metric

1 inch = 0.0254 meter
1 foot, 12 inches = 0.3048 meter
3.281 feet 39.37 inches = 1 meter

Volume

1 gallon = 0.16057 cubic foot = 4.537 liters.
1 cubic foot = 0.02832 cubic meter = 2.83 liters.
35.32 cubic feet = 220 gallons 1 cu. meter = 1000 liters.

Weight (force)

1 lb. 16 oz. = 7000 grains = 0.4536 kilogramme
2.2046 lb. = 1 kilog. = liter of water at 4° C.
0.9842 ton. = 1 ton = 1000 kilos.

Pressure

1 lb. per square inch = 0.0703 kilg. per sq. cm.
1 atmosphere = 147 lbs. per sq. in. = 1.0333 Kilog. per sq. cm.
14.223 lb. per sq. in = 1 kilog. per sq. cm.

Work

1 foot pound (ft. lb.) = 0.13825 kilogrammeter.
7.223 ft. lb. = 1 kilogrammeter.

Power

1 horse power = 1.01385 force de cheval
0.9863 horse power = 1 force de cheval = 75 kilog. per sec.
0.00134 horse power = 0.1010 kilogrammeter per sec.

Heat

1 B.T.U. = 1 lb. deg. Fahr. = 778 ft. lb. = 0.252 kilo calorie
3.9863 B.T.U. = 1 kilo calorie = 427 kilog.

Heating Value

1 B.T.U. per lb. = 0.556 kilo. calories per kilo.
1 B.T.U. per cubic foot = 8.903 kilo. calories per cubic meter.
0.1123 B.T.U. per cubic foot = 1 kilo. calorie per cubic meter.

FURNACE TEMPERATURES

SIEMENS FURNACE FOR GAS RETORTS.

	Fahrenheit	Centigrade
Top of furnace	2174	1190
Bottom of furnace	1913	1045
Retorts at close of distillation:		
3 feet from cover	1607	875
4 feet 6 inches from cover	1742	950

Malleable Iron Works

	Fahrenheit	Centigrade
Annealing malleable iron	1500 to 1700	800 to 950

Glass Works

	Fahrenheit	Centigrade
Annealing glass	800 to 1000	425 to 550
Glass melting tanks	2200 to 2400	1200 to 1325
Glass furnace, between the pots	2507	1375

Galvanizing

	Fahrenheit	Centigrade
Galvanizing, large gray iron castings	775	413
Galvanizing, small gray iron castings	840	450
Galvanizing, very small gray iron castings, (such as nails)	880	470

Tinning

	Fahrenheit	Centigrade
Tinning with single kettle	500	260
Tinning with second kettle	400	200

CERAMIC INDUSTRY

	Common or Usual Temperature for Burning.			High Temperature for Burning.			Low Temperature for Burning.		
	Fahr.	Cent.	Cone.	Fahr.	Cent.	Cone.	Fahr.	Cent.	Cone.
Common red brick.	1814	990	8	1886	1030	6	1742	950	10
Vitrified brick. . .	2354	1200	8	2426	1330	10	2242	1230	5
Fire brick.	2426	1330	10	2714	1490	18	2354	1290	8
Sewer pipe.	2354	1290	8	2462	1350	11	2102	1150	1
Vitreous floor tile.	2426	1330	10	2498	1370	12	2354	1290	8
Porous Terra Cotta.	1814	990	8	1886	1030	6	1742	950	10
Tile—Salt glazed.	2354	1290	8	2462	1350	11	2102	1150	1
Porcelain—soft fire.	2282	1250	6	2354	1290	8	2210	1210	4
Porcelain —Hard fire.	2426	1330	10	2498	1370	12	2354	1290	8
Pottery— Biscuit	2354	1290	8	2390	1310	9	2318	1270	7
Pottery—Glost in United States.	2210	1210	4	2318	1270	7	2174	1190	3
Pottery—Glost in England.	1850	1010	7	1886	1030	6	1814	990	8
Trenton glost kilns.	2282	1250	6	2354	1290	8	2282	1250	6
Stoneware.	2354	1290	8	. . . . .	. . . . .	. . . . .	. . . . .	. . . . .	. . . . .
Emery wheels, vitrified.	2498	1370	12	. . . . .	. . . . .	. . . . .	. . . . .	. . . . .	. . . . .

TEMPERATURES BY LATEST SCIENTIFIC INVESTIGATIONS.

MELTING POINTS OF METALS

Name.	Fahrenheit.	Centigrade.
Tin	450	232
Bismuth	520	271
Cadmium	610	321
Lead	621	327
Zinc	787	419
Antimony	1166	630
Aluminum	1216	658
Silver	1762	961
Gold	1945	1063
Copper	1981	1083
Manganese	2237	1225
Nickel	2646	1452
Cobalt	2714	1490
Chromium	2750	1510
Iron (pure)	2768	1520
Palladium	2822	1550
Platinum	3191	1755
Rhodium	3525	1940

APPROXIMATE TEMPERATURES BY COLORS

	Fahrenheit.	Centigrade.
First visible red	977	525
Dull red	1292	700
Cherry red	1652	900
Dull orange	2012	1100
White	2372	1300
Dazzling white	2732	1500

SIEMENS-MARTIN PROCESS

	Fahrenheit.	Centigrade.
Gas from producers	1328	720
Gas entering generator	752	400
Gas leaving generator	2192	1200
Air leaving generator	1832	1000
Fumes passing to shaft	572	300
End of fusion of charge, open hearth	2588	1420
Refining the steel	2732	1500
Running into ladle, first	2876	1580
Running into ladle, last	2714	1490

BESSEMER PROCESS

	Fahrenheit.	Centigrade.
Running the slag	2876	1580
Running steel into ladle	2984	1640
Running steel into mold	2876	1580
Annealing furnace, ingot in	2192	1200
Ingot under hammer	1976	1080

TEMPERATURES

Degrees Fahrenheit equals $\frac{9}{5}$ deg. C. $+32$, or 1° F. equals 1.8° C. $+32$
Degrees Centigrade equals ($\frac{5}{9}$ deg. F. -32.)
Degrees Absolute Temperature, $T = 1°$ C. $+273$.
Degrees Absolute Temperature, $T = 1°$ F. $+459.4$

$$\text{Absolute Zero} \begin{cases} -273° \text{ on Centigrade scale} \\ -459.4° \text{ on Fahrenheit scale} \end{cases}$$

Mercury remains liquid to $-39°$ C. and thermometers with compressed N above the column of mercury may be used for as high temperatures as 400° to 500° C.

CHAPTER XIV

HOW TO OPERATE A PULVERIZED COAL PLANT

NOTE.—This applies particularly to the Holbeck System. However, the suggestions are applicable to all systems of pulverized coal plants.

A—SUGGESTIONS FOR THE OPERATOR

Try and be on the job at all times as fuel is the most important item in operating industrial plants.

So train your assistant that in case of sickness and unavoidable absence from the plant, it will not be necessary to stop the operation of the apparatus, thereby causing loss of production to your employers.

See that all machinery is kept oiled and grease cups filled every day.

See that the plant is carefully swept each day and everything kept tidy and clean at all times.

Carefully note any and all leaks and take the first opportunity to shut down necessary apparatus or connections and repair same.

Carefully note any unusual sounds around apparatus and discover their cause immediately.

Carefully watch the quality of coal furnished and report at once to the manager any undue slate or other gritty substances as such material tends to undue wear on the machinery.

At all times watch your supply of coal so that there is no delay in keeping the plant supplied.

See that all sub-station bins are kept full as there is no excuse for allowing a department to run out of fuel as long as the coal plant is in operation.

See that all wood and large pieces of iron are removed from coal cars before being dumped.

See that you have all the necessary tools for making repairs and adjustments in a certain place and that they are kept there.

See that you have, at all times, an ample stock of repair parts and when any are used, to have same immediately replaced.

Have racks and bins for all repair parts so they can be readily found without loss of time, as the expense of making such racks and bins can be easily saved in the saving of time to make repairs.

Arrange a set of signals with different departments to which fuel is being furnished, so in case of any trouble with the apparatus you can immediately shut down your machinery in the coal plant where necessary.

Fill the spur gear reducers with cylinder oil before starting.

When belts or belt conveyors have a tendency to travel up on one side of concentrators, that end of concentrators should be set forward in the direction belt travels, until belt travels in a straight line.

Where coal plant contains a crushed coal storage bunker, see that the belt conveyors which deliver the coal from this bunker to the dryer runs at the required speed for the capacity of the pulverizers which are in operation at the same time.

Carefully watch the coal coming from the dryer, and take sample of same at least once every two hours, to be sure that it is not overheated.

See that excelsior is put in all cups on bearings of pulverizers (Bonnot) and well lubricated with Sumner oil. Front cover plate should be removed and drivers and rolls examined every day. The driver shaft should be centered at least once a week by the two wedges provided under bearing next to driver. Driver should be in center of track.

B—How to Start a Pulverized Coal Plant

Start a fire in the rotary dryer, keeping fire back at least 18 in. from front of fire box and allowing lower ash doors open so as to allow air to be sucked in and through the grates, to be heated and passed up through the shell along with the gases of combustion.

Start the conveyor which conveys the coal from the dryer to the dried coal bins.

Start up the automatic scales and conveyor which feeds the dryer.

Start up the belt conveyor which conveys the coal from the coal storage bunker to the scale.

Turn in the electric magnet separator which is placed over the belt conveyor so as to remove all bolts, nuts, mule shoes and other magnetic material which would damage the machinery, and see that it is kept on in force as long as the belt conveyor is in operation.

Start up the bucket elevator and belt conveyor which conveys the crushed coal from the crusher.

Start up the coal crusher and see that the rolls are set close enough to crush the coal so that each lump will pass through a one-inch ring.

Start up the reciprocating feeder and see that it is moving at such speed as to keep the crusher fed with coal in a uniform manner.

After the dried coal bins are about three-quarters filled with dried coal, start up the exhaust fans which carry away the pulverized coal from the pulverizers.

Then start up one or more pulverizers according to the capacity desired at the time.

Start up the by-pass conveyors if for any reason you desire to convey the coal from one storage bin to the other.

Start up the booster blowers on the distributing line which you wish to use.

After the booster blowers have been in operation for at least 15 minutes, start up the distributing blowers.

See that all valves to separate furnaces are closed tight.

Now, and not before, start up the feed screws which feed the powdered coal into the suction side of the distributing blowers.

Then open up valves on furnaces where desired.

C—How to Stop a Pulverized Coal Plant

Shut all valves on furnaces, then stop the feed screws feeding the powdered coal, but keep the distributing blowers and boosters in operation.

After the feed screws have been stopped for at least 30 minutes, stop the distributing blower, then follow this by stopping the booster blower.

Stop the reciprocating feeder and after coal has gone through coal crusher, stop it also.

Stop belt conveyor which conveys the coal from the coal crusher.

Stop bucket elevator after it becomes entirely empty.

Stop belt conveyor running from the crushed coal storage bunker and feeding scale.

Run dryer at least 30 minutes after the last bit of coal has been conveyed into it, so as to be sure it is entirely empty.

Stop screw conveyors leading from dryer about 15 minutes after dryer is stopped.

Stop pulverizer after dried coal bins are empty.

Run the exhaust fans leading from the vacuum separators of the pulverizers at least 15 minutes after the pulverizers are stopped.

After exhausters are stopped, shut down the by-pass screw conveyors.

DONT'S

DON'T have a large fire in the dryer so as to set fire to the coal. It is the large quantity of warm air which removes the moisture instead of a big fire. The coal, as it leaves the dryer, should be hot enough to hold in your bare hand.

DON'T hold lighted torch or match over manhole in dried coal bin to see how much coal is in the bin.

DON'T smoke in powdered coal plant or strike matches. You are taking chances.

DON'T leave open small handhole door on pulverizers (Bonnot) to watch the coal go around. You are destroying the vacuum.

DON'T be alarmed if the pulverizer is noisy.

DON'T allow the pulverizer to run empty. See that the feeder is always working.

DON'T allow leaks around any of the piping leading from the top of vacuum separator or back to separator on pulverizer, as by so doing you cut down the capacity of the pulverizer.

DON'T run the pulverizer a moment if the exhauster for any reason stops.

DON'T allow any leaks in the collectors.

DON'T allow the motors to race at any time.

DON'T allow indicator float to become stuck in the pipe.

DON'T allow regulator to become uesless; it is there for a definite purpose.

DON'T start up the distributing blower in the coal plant until all booster blowers in the line are in operation.

DON'T by any means start feeding coal into the blowers until the blowers have been running at least 20 minutes.

DON'T FEED COAL into the blowers until you are sure all valves on the lines leading to the furnaces are closed.

DON'T shut down distributing blower until you first stop the feed screws by at least 15 minutes.

DON'T start up reciprocating feeder until coal crusher is running at full speed.

Don't run belt conveyor under crushed coal storage bunker faster than the capacity of the pulverizers, else you will have difficulty in drying the coal.

Don't feed the dryer with batches of coal; see that it is fed into the dryer uniformly as to speed and quantity.

Don't fire dryer in front of arch, as the flame will ignite the coal in dryers. Fresh coal should be thrown clear back under the arch.

Don't use waste in pulverizer bearings; they will burn out.

Don't fail to clean out powdered coal bins at least once a week.

Don't run blast wheels in blowers without being securely keyed on shaft.

Don't run blowers if blast wheels rub against the housing at any place.

BIBLIOGRAPHY

References Compiled by Engineering Societies Library

Magazine Articles

Pulverized Coal under Central Station Boilers, J. Anderson. *Power*, vol. 51, p. 336–339, 1920.

Efficient Use of Pulverized Coal in Malleable Foundry Practice, M. W. Arrowwood. *Iron Age*, vol. 105, p. 159–261, 1920.

Distributing Pulverized Coal to Small Plants, B. J. Cross. *Coal Age*, vol. 17, p. 635–637, 1920.

Pulverized Coal in Open-hearth Practice, W. H. Fitch. *Iron Age*, vol. 104, p. 1323–1328, 1920.

Four-day Test on Five Oneida Street Boilers Burning Pulverized Coal. *Power*, vol. 51, p. 354–357, 1920.

Successful Pulverized Coal Installation of the Milwaukee Electric Railway and Light Co., I. L. Kentish-Rankin. *Power Plant Engineering*, vol. 24, p. 313–321, 1920.

Pulverized Fuel, E. R. Knowles. *Jnl. of the American Society of Heating and Ventilating Engineers*, vol. 26, p. 17–72, 1920.

Locomotive Powdered Fuel Burning Apparatus. Great Central Ry., *Railway Review*, vol. 66, p. 410–411, 1920.

Powdered Coal Winning Out in Special Fields, C. Longenecker. *Coal Trade Jnl.*, vol. 51, p. 353–355, 1920.

Pulverized Coal in Metallurgical Furnaces at High Altitudes, O. L. McIntyre. *Mechanical Engineering*, vol. 42, p. 225–227, 1920.

Some Phases of the Fuel Problem, G. A. Orrok. *Scientific American Monthly*, vol. 1, p. 426–428, 1920. Compares liquid and pulverized fuels.

Coal Pulverizing Plant at Nevada Consolidated Copper Smelter, R. E. H. Pomeroy. *Mining and Metallurgy*, Bull. 158 (section 28), p. 1–11, 1920.

Powdered Coal Plant at Seattle. *Electric Railway Journal*, vol. 55, p. 482–483, 1920.

Powdered Coal Plant with Compressed Air Transport. *Electric Railway Journal*, vol. 55, p. 817–818, 1920.

Pulverized Coal at Milwaukee. *Power*, vol. 51, p. 341–342, 1920.

Methods of Preparing Pulverized Coal, Joseph F. Shadgen. *Iron Age*, vol. 105, p. 389–392, 1920.

Status of the Powdered Fuel Problem, J. F. Shadgen. *Iron Age*, vol. 105, p. 32–34, 1920.

Utilization de charbon pulvérisé au chauffage des fours à cuivre, G. de Venoncourt. *Revue de Métallurgie*, vol. 17, p. 2–12, 1920.

Progress in Powdered Coal for Blast Furnaces, W. L. Wotherspoon. *Engineering and Mining Journal*, vol. 109, p. 803–804, 1920.

Powdered Coal for Firing Metallurgical Furnaces and Steam Boilers, J. S. Atkinson. *Iron and Coal Trades Review*, vol. 98, p. 651–652, 1919.

Pulverized Coal: Its Utilization, H. G. Barnhurst. *Concrete*, vol. 14, Suppl., p. 20–23, 1919.

Burning Pulverized Coal in a Sheet Mill. *Iron Age*, vol. 104, p. 1167–1172, 1919.

Progrès réalizés pendant la guerre dans l'utilization des combustibles, E. Damour. *Industrie Electrique*, vol. 28, p. 5–7, 1919.

Discussion on Pulverized Coal at the A. S. M. E. Spring Meeting. *Journal of the American Society of Mechanical Engineers*, vol. 41, p. 752–756, 1919.

Pulverized Coal Burners versus Stokers, J. T. Foster. *Electrical World*, vol. 73, p. 474–475, 1919.

Waste-heat Boilers and Pulverized Fuel in Chemical Factories. C. J. Goodwin. *Journal of the Society of Chemical Industry*, vol. 38, p. 213-T-222-T, 1919.

Powdered Coal for the Small Foundry, A. J. Grindle. *Foundry*, vol. 47, p. 679–680, 1919.

Pulverized Coal as a Fuel, N. C. Harrison. *Mechanical Engineering*, vol. 41, p. 645–649, 1919. Same condensed, *Power*, vol. 50, p. 287–291.

Pulverized Coal and Colloidal Oil on Board Ship, L. C. Harvey. *Shipbuilder*, vol. 21, p. 263–269, 1919.

Use of Pulverized Coal with Special Reference to Its Application in Metallurgy, L. C. Harvey. *Journal of the Iron and Steel Institute*, vol. 99, p. 47–132, 1919. Bibliography, p. 116–119.

Pulverized Coal as the Reconstruction Fuel for All Industrial Heating Operations, C. F. Herington. *Iron and Steel of Canada*, vol. 2, p. 77–83, 1919.

Pulverizing Coal in Canadian Steel Plant, C. F. Herington. *Iron Age*, vol. 103, p. 1065–1069, 1919.

Instructions for Safe Rise of Pulverized Fuel. *Engineer*, vol. 127, p. 398–399, 1919.

Handling Powdered Coal as Fuel, H. A. Kimber. *Engineering World*, vol. 14, p. 19–24, 1919.

L'emploi du charbon pulverisé sur les locomotives, E. Lasseur. *Génie Civil*, vol. 74, p. 345–349, 1919.

Locomotive Pulverised Fuel Equipment. *Railway Mechanical Engineer*, vol. 93, p. 498–500, 1919.

Pulverized Coal for Metallurgical Furnaces, C. E. Longenecker. *Iron Age*, vol 103, p. 351–352, 1919.

Using Pulverized Coal for Annealing, C. E. Longenecker. *Foundry*, vol. 47, p. 680–681, 1919.

Pulverized Coal for Blast Furnaces, E. P. Mathewson and W. L. Wotherspoon. *Engineering and Mining Journal*, vol. 108, p. 274–278, 1919.

Powdered Fuel Burning Apparatus for an Australian Railway. *Railway Review*, vol. 64, p. 457–459, 1919.

Progress in Utilizing Pulverized Fuel, Committee Report 1919. *Coal Age*, vol. 15, p. 992–995. Abstract, *Power*, vol. 49, p. 997.

Pulverized Coal, Coal Storage and the Schultz System of Burning Fine Coal. *Power*, vol. 50, p. 296, 1919.

Pulverized Coal for Stationary Boilers, F. A. Schiffler and H. G. Barnhurst. *Mechanical Engineering*, vol. 41, p. 650–652, 1919.

Pulverized Coal as a Fuel for Boilers, E. R. Welles, and W. H. Jacobi. *Mechanical Engineering*, vol. 41, p. 744–749, 1919.

Excellent Results with Pulverized Coal at Milwaukee. *Power*, vol. 48, p. 556–559, 1918.

Use of Powdered Coal, W. G. Wilcox. *Mining and Scientific Press*, vol. 116, p. 849–853, 1918.

Method of Burning Powdered Coal. *Iron Age*, vol. 101, p. 545–549. Abstract *Journal American Society of Mechanical Engineers*, vol. 40, p. 345–346, 1918.

Diversified Application of Powdered Coal, C. Longenecker. *Iron Age*, vol. 102, p. 619–623, 1918.

Pulverized Coal and Its Future, H. G. Barnhurst. *General Electric Review*, vol. 21, p. 116–119, 1918.

Use of Pulverized Coal at the Bunker Hill and Sullivan Smelt-

ING AND REFINING PLANT, C. T. Rice. *Engineering and Mining Journal,* vol. 106, p. 91–94, 1918.

USE OF PULVERIZED COAL, C. Dantin. *Engineering and Contracting,* vol. 49, p. 544–545, 1918.

FIRING WITH COAL DUST. *Engineering,* vol. 105, p. 552–553, 1918.

PULVERIZED COAL ON AMERICAN LOCOMOTIVES. *Engineer,* vol. 126, p. 156–157, 1918.

EXTENT OF THE USE OF PULVERIZED FUEL IN THE INDUSTRIES AND ITS POSSIBILITIES IN THE WAR, F. P. Coffin. *General Electric Review,* vol. 21, p. 373–380, 1918.

EXPERIENCE WITH POWDERED COAL, A. E. Macinnis. *Electrical World,* vol. 71, p. 1032–1034, 1918.

POWDERED COAL SUBSTITUTED FOR FUEL OIL AT SEATTLE. *Electrical Review,* vol. 73, p. 529–531, 1918.

POWDERED COAL FOR POWER PLANTS, F. Seymour. *Electrical Review,* vol. 72, p. 590–593, 1918.

PULVERIZED COAL FOR INDUSTRIAL PURPOSES, J. Cunliffe. *Coal Age,* vol. 13, p. 963–967, 1918.

GENERAL UTILIZATION OF PULVERIZED COAL, H. G. Barnhurst. *Chemical Engineering and Mining Review,* vol. 10, p. 174–177, 1918.

POSSIBILITIES OF POWDERED COAL AS SHOWN BY ITS COMBUSTION CHARACTERISTICS, W. G. Wilcox. *Chemical and Metallurgical Engineering,* vol. 19, p. 35–40; *Scientific American Supplement,* vol. 86, p. 62–64; *Iron Age,* vol 102, p. 387; *Iron Trade Review,* vol. 63, p. 144–145; *Engineering and Mining Journal,* vol. 106, p. 450, 1918.

REPORT OF COMMITTEE OF NAVAL CONSULTING BOARD ON PULVERIZED FUEL. *Journal American Society of Mechanical Engineers,* vol. 40, p. 395–396, 1918.

HOW CAN SOFT COAL BE BURNED WITHOUT SMOKE IN MARINE BOILERS. *Journal American Society Mechanical Engineers,* vol. 40, pt. 2, p. 619–622. Abstract, *International Marine Engineering,* vol. 23, p. 466–467, 1918.

USE OF COAL IN PULVERIZED FORM, H. R. Collins. *Bulletin American Institute Mining Engineers,* vol. 136, p. 955–961; *Engineering and Mining Journal,* vol. 106, p. 305–307; *Iron Trade Review,* vol. 62, 1243–1245. Abstract, *Engineering and Contracting,* vol. 49, p. 467–468; *Iron Age,* vol. 101, p. 1274, 1918.

PULVERIZED FUEL, E. R. Knowles. *Steam,* vol. 22, p. 35–41, 96–102, 128–133, 1918.

Pulverized Fuel Plant, Atchison, Topeka and Santa Fé Railway, Marceline, Mo. *Railway Review*, vol. 60, p. 167–168. 1917.

Pulverized Coal, W. L. Robinson. *Railway Review*, vol. 60, p. 699–700, 1917.

Pulverized Fuel in Brazil. *Railway Review*, vol. 61, p. 505–507, 1917.

Use of Pulverized Coal as a Fuel for Boilers, H. G. Barnhurst. *Power*, vol. 46, p. 363–365, 1917.

Powdered Coal for Malleable Iron Melting, J. Harrington. *Iron Age*, vol. 100, p. 1498, 1917.

Powdered Coal Prevents Smoke. *Coal Age*, vol. 12, p. 527, 1917.

Powdered Coal for Large Furnaces. *Iron Trade Review*, vol. 60, p. 921–923, 1917.

Pulverized Coal for Air Furnaces, W. R. Bean. *Iron Trade Review*, vol. 61, p. 660–661. *Foundry*, vol. 45, p. 487–489, 1917.

Powdered Coal Equipment Installed at Standard Tin Plate Co., Canonsburg, Pa. *Iron Trade Review*, vol. 61, p. 829–830, 1917.

New Powdered Coal Process, A. G. Kinyon. *Iron Age*, vol. 99, p. 316, 1917.

New Air-carried Powdered Coal Plant. *Iron Age*, vol. 100, p. 742–743, 1917.

Use of Pulverized Fuel for Locomotive Operation, V. Z. Caracristi. *General Electric Review*, p. 853–859, vol. 20, *Railway Review*, vol. 61, p. 785–787. Abstract, *Iron Age*, vol. 100, p. 727, 1917.

Utilization of Waste and Undeveloped Fuels in Pulverized Form, V. Z. Caracristi. *General Electric Review*, vol. 20, p. 698–704, 1917.

Use of Low-grade Mineral Fuels and the Status of Powdered Coal, F. P. Coffin. *General Electric Review*, vol. 20, p. 616–30, 1917.

Pulverized Fuel in a Power Plant on the Missouri, Kansas & Texas Railway, H. R. Collins and J. Harrington. *General Electric Review*, vol. 20, p. 768–777. Abstract, *Railway Mechanical Engineer*, vol. 92, p. 503–504; *Journal American Society Mechanical Engineers*, vol. 39, p. 957; *Electrical World*, vol. 70, p. 869–870, 1917.

General Utilization of Pulverized Coal, H. G. Barnhurst. *General Electric Review*, vol. 20, p. 924–931. Abstract, *Electrical Review*, vol. 71, p. 1100–1102. *Scientific American*, vol. 85, p. 34–35. *Iron Age*, vol. 101, p. 625–627. *Machinery*, v. 24, p. 901, 1917.

Utilization Coal-mine Waste; Puget Sound Traction, Light and Power Co., H. Hull. *Electrical World*, vol. 69, p. 1105. *Electric Railway Journal*, vol. 49, p. 923–924, 1917.

Furnace Calculations, S. W. Symons. *Coal Age*, vol. 11, p. 720–721, 1917.

Pulverized Coal as a Power House Fuel, R. Trautschold. *Coal Age*, vol. 11, p. 16–20, 1917.

Ball Mills for Coal Pulverization, F. J. Jones. *Coal Age*, vol. 12, p. 52–53, 1917.

Use of Pulverized Fuel on Locomotives, J. E. Muhlfeld. *Journal American Society Mechanical Engineers*, vol. 39, p. 760–761. *Locomotive*, vol. 31 ,p. 240–242. Abstract, *Machinery*, vol. 24, p. 138, 1917.

Coal Dust Fired Reverberatory Furnaces in Chile. *Engineering and Mining Journal*, vol. 102, p. 777–780, 1916.

Use of Pulverized Coal in Metallurgical Processes;. Discussion of the Engineering Principles Involved, C. J. Gadd. *Journal Franklin Institute*, vol. 182, p. 323–352. Abstract, *Iron Age*, vol. 97, p. 890–895. *Journal American Society Mechanical Engineers*, vol. 38, p. 423–424, 1916.

Pulverized Fuel for Stationary Boilers on the Missouri, Kansas and Texas. *Railway Mechanical Engineer*, vol. 90, p. 499–502. *Railway Age Gazette*, vol. 61, 549–551. Abstract, *Journal American Society Mechanical Engineers*, vol. 38, p. 932, 1916.

Powdered Coal in Engine Service, C. W. Corning. *Railway Mechanical Engineer*, vol. 90, p. 565–568, 1916.

Powdered Fuel; Report of Committee of American Railway Master Mechanics Association. *Railway Review*, vol. 58, p. 935–936, 1916.

Powdered Fuel; Report of Committee of International Railway Fuel Association; with Discussion. *Railway Age Gazette*, vol. 60, p. 1081–1083. *Railway Review*, vol. 58, p. 720–723, *Railway Mechanical Engineer*, vol. 90, p. 279–281, 1916. Abstract, *Journal American Society Mechanical Engineers*, vol. 38, p. 798. *Iron Age*, vol. 97, p. 1254. *Scientific American Supplement*, vol. 82, p. 320.

North Western Pulverized Coal Locomotive. *Railway Age Gazette*, vol. 61, p. 227–230, 1916.

Pulverized Coal for Open Hearths, J. W. Fuller. *Iron Age Trade Review*, vol. 59, p. 898–903. Abstract, *Iron Age*, vol. 98, p. 1037–1039, 1916.

Utilizing Powdered Coal at Lebanon, Pa. *Iron Age*, vol. 97, p. 1317–1319, 1916.

Powdered Coal Burning. *Iron Age*, vol. 98, p. 134–136, 1916.

Coal Dust Firing in Reverberatory Furnaces, C. R. Kuzell. *Engineering and Mining Journal*, vol. 101, p. 302–306. Abstract, *Metallurgical and Chemical Engineering*, vol. 14, p. 338, 1916.

Pulverized Coal—Its Preparation and Use in Industrial Furnaces, S. H. Harrison. *Engineering Magazine*, vol. 50, p. 742–753, 1916.

Bettington Boiler for Powdered Coal, R. T. Mawdesley. *Electrical World.* vol. 67, p. 610–611, 1916.

Important Installation of Pulverized Coal under Stationary Boilers. *Metallurgical and Chemical Engineering*, vol. 15, p. 365–366, 1916.

Pulverized Fuel Installation Serving Ten 250-hp. O'Brien Boilers, H. G. Barnhurst. *Journal American Society of Mechanical Engineers*, vol. 38, p. 799–801, 1916.

Pulverized Fuel for Locomotives, J. E. Muhlfeld. *Journal American Society Mechanical Engineers*, vol. 38, p. 983–990; *Railway Age Gazette*, vol. 61, p. 1097–1099; *Railway Review*, vol. 59, p. 852–859; *Railway Mechanical Engineering*, vol. 91, p. 11–13; Discussion, *Railway Age Gazette*, vol. 61, p. 1099–1100; *Railway Mechanical Engineering*, vol. 91, p. 13–14; *Journal American Society Mechanical Engineers*, vol. 39, p. 48–49, 141–144, 1916.

Use of Powdered Coal as a Fuel, C. L. Heisler. *Journal American Society Mechanical Engineers*, vol. 38, p. 999–1001, 1916.

Powdered Coal as a Fuel, J. Harrington. *Journal American Society Mechanical Engineers*, vol. 38, p. 796–799; *Power*, vol. 44, p. 76–77; Abstract, *Railway Mechanical Engineering*, vol. 90, p. 399–400; *Scientific American Supplement*, vol. 82, p. 287; *Iron Age*, vol. 97, p. 1255, 1916.

Powdered Coal; Its Preparation and Use in Locomotives and Stationary Boilers, W. L. Robinson. *Railway Review*, vol. 56, p. 772–776; Abstract, *Railway Age Gazette*, (machinery), vol. 89, p. 271–273; *Power*, vol. 41, p. 793–794; *Colliery Engineer*, vol. 35, p. 646–648; *Engineering and Mining Journal*, vol. 100, p. 19; *Scientific American Supplement*, vol. 80, p. 139, 1915.

Pulverized Fuel for Locomotives. *Railway Age Gazette*, vol. 58, p. 941–943; *Railway Age Gazette*, (machinery), vol. 89, p. 213–215; Abstract, *Engineering Magazine*, vol. 49, p. 440–441, 1915.

Problems in Burning Powdered Coal, A. S. Mann. *General Electric Review*, vol. 18, p. 920–924, 956–965; *Iron Age*, vol. 96, p. 632–634; Abstract, *Iron Trade Review*, vol. 58, p. 229–232, 1915.

Anaconda Coal Pulverizing Plant, E. P. Mathewson. *Engineering and Mining Journal*, vol. 100, p. 45–48.

New Systems for Burning Powdered Coal in Metallurgical Furnaces, C. F. Herington. *Engineering News*, vol. 73, p. 1028–1030, 1915.

Powdered Coal Plant at Anaconda, L. V. Bender. *Metallurgical and Chemical Engineering*, vol. 13, p. 333–335, 1915.

Powdered Coal Preparation and Firing in Germany. *Journal American Society Mechanical Engineers*, vol. 37, p. 648–656, 1915.

Coal Dust Fired Reverberatory Furnaces of the Canadian Copper Co., D. H. Browne. *Transaction American Institute of Mining Engineers*, Bulletin No. 97, p. 49–60; Abstract, *Journal American Society of Mechanical Engineers*, vol. 371, p. 187; *Engineering and Mining Journal*, vol. 99, p. 412–413, 1915.

Coal-dust Fired Reverberatories at Washoe Reduction Works, L. V. Bender. *Bulletin American Institute of Mining Engineers*, No. 97, p. 73–81; Abstract, *Journal American Society Mechanical Engineers*, vol. 37, p. 188–189; *Metallurgical and Chemical Engineering*, vol. 13, p. 184; Discussion, *Bulletin American Institute of Mining Engineers*, vol. 101, p. 1174–1186, 1915.

Pulverized Coal for Steam Making, F. R. Low. *Power*, vol. 40, p. 35–38; *Journal American Society Mechanical Engineers*, vol. 36, p. 346–352; Abstract, *Industrial Engineering*, vol. 14, p. 333–336; Abstract, *Colliery Engineer*, vol. 35, p. 530–532; *Heating and Ventilating*, vol. 12, p. 34–37, 1914.

Powdered Coal as a Fuel—a Review, J. Harrington. *Power*, vol. 39, p. 351–352, 1914.

Powdered Coal in Boiler Furnaces, W. A. Evans. *Power*, vol. 39, p. 470–472, 1914.

Burning Pulverized Coal and Oil Mixed, A. Trandt. *Iron Age*, vol. 93, p. 1048–1049; *American Gas Light Journal*, vol. 100, p. 299–300, 1914.

Pulverizing Coal at Midvale Steel Works. *Iron Age*, vol. 93, p. 1565–1568, 1914.

Burning Pulverized Coal, R. C. Carpenter. *Iron Age*, vol. 94, p. 148–149, 1914.

Powdered Coal in Industrial Furnaces, W. Dalton, W. S. Quigley. *Iron Age*, vol. 94, p. 80–82, 1914.

Powdered Coal for Heating Furnaces, C. F. Herington. *Iron Age*, vol. 94, p. 1045–1048, 1914.

Use of Pulverized Coal. *Iron Age*, vol. 93, p. 1585, 1604–1605, 1914.

Pulverized Coal as a Fuel. *Engineering and Mining Journal*, vol. 97, p. 997–999, 1914.

Comparison of the Economy of Powdered Coal, Oil and Water Gas for Heating Furnaces, C. F. Herington. *Engineering News*, vol. 72, p. 1156–1158, 1914.

Economic Use of Powdered Coal, W. S. Quigley. *Engineering Magazine*, vol. 47, p. 423–425, 1914.

Dunn Pulverized Coal Burner, G. A. Roush. *Metallurgical and Chemical Engineering*, vol. 12, p. 19–20, 1914.

Installation for Powdered Coal Fuel in Industrial Furnaces, W. Dalton and W. S. Quigley. *Journal American Society Mechanical Engineers*, vol. 36, p. 352–357, 1914.

Pulverized Coal Burning in the Cement Industry, R. C. Carpenter. *Journal American Society Mechanical Engineers*, vol. 36, p. 337–346; Abstract, *Industrial Engineering*, vol. 14, p. 331–333; *Colliery Engineer*, vol. 35, p. 529–530, 1914.

Topical Discussion of the Papers Presented to the American Society of Mechanical Engineers Journal. *Journal American Society Mechanical Engineers*, vol. 36, p. 358–371, 1914.

Fuel Possibilities in Steel Making. *Iron Age*, November 6, 1913, p. 1056–1059. Paper read before the American Iron and Steel Institute, by William Whigham. The author discusses the use of pulverized coal as a fuel for open-hearth furnaces.

Improved Pulverized Fuel Feed Device. *Iron Age*, November 6, 1913, p. 1024. Brief description of the Dunn apparatus, especially intended for cement kilns, but used also in the nodulizing of iron ore.

Wider Utilization of Pulverized Coal, H. R. Barnhurst. *Iron Age*, October 23, 1913, p. 906–908. Part of discussion of paper by James Lord on The Use of Pulverized Fuel in Metallurgical Furnaces, read before the Engineers' Society of Western Pennsylvania.

Powdered Coal for Open Hearth Furnaces. *Iron Age*, October 16, 1913, p. 855. Abstract from the "Coal and Coke Operator."

Use of Pulverized Coal as a Fuel for Boilers, R. C. Carpenter. *Sibley Journal of Engineering*, December, 1913, p. 85.

Coal-Dust Fired Boiler. *Indian Engineering*, November 29, 1913, p. 301.

Progress in Fuel Utilization. *Mining and Scientific Press*, October 25, 1913, p. 638.

Buffalo Grain Elevator Dust Explosion. *Engineering News*, July 31, 1913, p. 223–24. Reprinted in the *National Fire Protection Association Quarterly*, October, 1913, p. 149–151. Mention is made of the danger of explosions in connection with the burning of powdered coal.

Powdered Fuel and Explosions. *Railway Age Gazette*, July 18, 1913, p. 83–84. Letter by W. D. Wood.

Use of Pulverized Coal in Metallurgical Furnaces, James Lord. *Engineers' Society of Western Pennsylvania, Proc.*, October, 1913, p. 363–372; discussion, p. 371–417. With bibliography.

Pulverized Fuel for Boiler Firing, C. H. Wright. *Electrical World*, March 15, 1913, p. 567–569.

Pulverized Coal as a Fuel, H. R. Barnhurst. *Metallurgical and Chemical Engineering*, March, 1913, p. 127–129. With special reference to metallurgical furnaces.

POWDERED COAL AS FUEL. *Indian Engineering*, August 16, 1913, p. 91. Briefly discusses its use as a locomotive fuel.

POWDERED FUEL FOR LOCOMOTIVES, Walter D. Wood. *Railway Age Gazette*, July 4, 1913, p. 13–15; Aug. 1, p. 174.

PULVERIZED COAL AS A CHEAP FUEL. *Automobile*, June 5, 1913, p. 1177. Letter asking questions as to the use of pulverized coal. Answers are given.

PROBLEM OF BURNING PULVERIZED FUEL, Sterling H. Bunnell. *Iron Age*, September 18, 1913, p. 618.

USE OF PULVERIZED COAL AS FUEL FOR METALLURGICAL FURNACES, H. R. Barnhurst. *American Institute of Mining Engineers, Bull.*, October, 1913, p. 2523–2532; discussion, December, 1913, p. 2856–2863.

PULVERIZED COAL AS A FUEL, A. W. Raymond. *Metallurgical and Chemical Engineering*, February, 1913, p. 108–109. On the use of pulverized coal in metallurgical furnaces and in cement burning.

BURNING OF POWDERED COAL, W. E. Porter. *Industrial World*, vol. 47, p. 146–147, February 3, 1913.

POWDERED COAL AS FUEL, W. S. Quigley. *Railway and Engineering Review*, November 15, 1913, p. 1067–1068. Paper read before the American Foundrymen's Association.

SMALL COAL AND DUST: ITS PRODUCTION, PREVENTION, TREATMENT, AND UTILIZATION, WITH SPECIAL REFERENCE TO DRY MINES, J.Drummond Paton. *Institution of Mining Engineers, Trans.*, vol. 45, pt. 3, p. 421–446; discussion, p. 446–449, 1912–1913. Same in *Manchester Geological and Mining Society, Trans.*, vol. 33, pt. 6, p. 198–223; discussion, p. 223–226, 1912–1913. Results of official tests made by the Stirling Boiler Co.

FIRING SOFT COAL SCREENINGS, John S. Leese. *Mechanical World*, vol. 51, p. 160–161, 1912.

DUST FUEL BOILER AND ITS USES, H. V. Hart Davis. *Manchester Geological and Mining Society, Trans.*, vol. 22, p. 224–233; discussion, p. 233–242, 1912. Abstract in *Iron and Coal Trades Review*, February 23, 1912, p. 198–299; *Engineering Magazine*, March, 1913, p. 936–938.

PULVERIZED COAL AN ECONOMICAL STEAM FUEL. *Steam*, May, 1912, p. 135–138. A table shows results obtained with a Bettington boiler.

METHODS OF BURNING ANTHRACITE COAL DUST, Wm. Kavanagh. *Electrical World*, December 7, 1912.

RECENT IMPROVEMENTS AND ADDITIONS TO THE SMELTING PLANT OF THE CANADIAN COPPER COMPANY, D. H. Browne. *Canadian Mining Institute, Trans.*, vol. 15, p. 115–122, 1912.

COMBUSTION OF PULVERIZED COAL, L. S. Hughes. *American Institute of Chemical Engineers, Trans.*, vol. 4, p. 347–349, 1911.

Pulverized Coal, A New Fuel, Wm. D. Ennis. *Automobile*, vol. 25, p. 620–621, 1911. Contains paragraph on the use of powdered coal under steam boilers.

Bettington Boilers for Pulverized Fuel. *Railway News*, vol. 96, p. 1422–1423, 1911. Gives results of tests.

De l'Emploi des Poussiers dans les foyers mecaniques, J. Izart. *L'Electricien*, vol. 41, p. 54–57, 1911.

Firing Boilers with Pulverized Coal, W. S. Worth. *Power*, vol. 33, p. 264–267, 1911. Tests were made at the Henry Phipps plant, Pittsburg.

The Rotary Kiln, Ellis Soper. *American Society of Mechanical Engineers, Journal*, October, 1910; discussion, April, 1911. In the paper and in the discussion reference is made to the earliest successful use of pulverized coal for cement manufacture.

Use of Pulverized Coal for Foundry Purposes, Richard K. Meade. *American Foundrymen's Association, Trans.*, vol. 18, p. 39–45, 1909. Abstract in *Foundry*, vol. 34, p. 196–198, 1909. The author gives an estimate of the cost of pulverizing.

Coal Dust Firing of Reverberatory Furnaces, Edward G. Thomas. *Engineering and Mining Journal*, vol. 85, p. 269–270, 1908.

Coal Dust Firing for Reverberatory Furnaces, Charles F. Shelby. *Engineering and Mining Journal*, vol. 85, p. 541–544, 1908.

Feeding Pulverized Coal to Furnaces, R. Cederblom. *Power*, vol. 28, p. 299–300, 1908.

Some Industrial Applications of Pulverized Coal, W. D. Ennis. *Brooklyn Engineers' Club, Proc.*, vol. 12, p. 183–200; discussion, p. 201–217, 1908. The author discusses various methods of grinding coal and special applications such as firing of steam boilers and industrial furnaces.

Pulverized Coal and its Industrial Applications, W. D. Ennis. *Engineering Magazine*, vol. 34, p. 463, 577, 1907–1908. Costs are given.

Use of Pulverized Fuel for Heating Metallurgical Furnaces, Richard K. Meade. *American Institute of Chemical Engineers*, vol. 1, p. 98–115, 1908.

Using Soft Coal Screenings. *Power*, vol. 29, p. 706, 1908.

Economy of the Long Kiln, E. C. Soper. *American Society of Mechanical Engineers, Trans.*, vol. 29, p. 143–148; discussion, p. 149–158, 1907. In the discussion Prof. William D. Ennis gives some figures relative to the cost of pulverizing coal.

Schwartzkopff System of Coal Dust Firing, P. M. Pritchard. *Liverpool Engineering Society, Trans.*, vol. 28, p. 154–165; discussion, p. 166–176, 1907. An account of tests.

DUST FUEL STOCKERS AND AUXILIARY PLANT, W. R. Harrison. *Leeds University Society*, December 10, 1906.

BAENSCH-FEUERUNGEN ZUR VERFEUERUNG VON TEER, KOHLENSTAUB, ETC., Wegener. *Asphaltkunde u. Teer Industrie Zeitung*, vol. 6, p. 4, 1906.

COAL PULVERIZER AND AUTOMATIC STOKER. *American Electrician*, vol. 14, p. 196–197, 1906. Description of " Ideal " fuel feeder.

POWDERED COAL FIRING FOR STEAM BOILERS, Geo. C. McFarlane. *Engineering and Mining Journal*, vol. 81, p. 901–902, 1906. Comparison of costs of hand firing and powdered-coal firing.

PROBLEM OF SMOKE ABATEMENT, Wm. H. Bryan. *American Machinist*, vol. 29, pt. 2, p. 52–54, 1906. Powdered coal is compared with other fuels, as to cost, efficiency.

COAL DUST FIRING OF REVERBERATORY MATTE FURNACES, S. Severin Sorensen. *Engineering and Mining Journal*, vol. 81, p. 274–276. 1906. With diagrams of smelting results.

COAL DUST FIRING FOR STEAM BOILERS. *Engineer* (Lond.), vol. 99, p. 502–503, 1905. Gives results of tests made with the Schwartzkopff apparatus by C. E. Stromeyer, of the Manchester Steam Users' Association.

FIRING WITH COAL DUST, Eustace Carey. *Society of Chemical Industry, Jour.*, vol. 24, p. 369–371; discussion, p. 371–372, 1905. Abstract in *Engineering and Mining Journal*, vol. 80, p. 1113–1114, 1905.

UTILIZATION OF LOW-GRADE FUELS FOR STEAM GENERATION, W. Francis Goodrich. *Engineering Magazine*, vol. 30, p. 346–354, 1905.

ROAD TESTS OF BROOKS PASSENGER LOCOMOTIVES, E. A. Hitchcock. *American Society of Mechanical Engineers, Trans.*, vol. 26, p. 290–306; discussion, p. 306–311, 1905. In the discussion on pp. 310–311 the use of pulverized coal as a fuel for locomotives was considered.

COAL DUST FIRING AS APPLIED TO ANNEALING FURNACES. *Iron and Coal Trades Review*, vol. 70, p. 1999, 1905. Schwartzkopff system.

COMPARATIVE BOILER TESTS WITH ORDINARY AND PULVERIZED COAL FIRING. *Engineering Record*, vol. 49, p. 342, 1904.

BURNING POWDERED COAL, H. J. Travis. *Power*, vol. 24, p. 168–196, 271, 1904. Tests of various systems, also comparative tests of hand-fired and pulverized-fuel boilers.

POWDERED COAL FOR STEEL ANNEALING, H. J. Travis. *American Machinist*, vol. 27, pt. 1, p. 791–792, 1904.

USE OF PULVERIZED COAL FOR FUEL UNDER STEAM BOILERS, J. M. Sweeney. *Western Society of Engineers, Jour.*, vol. 9, p. 141–149; discussion, p. 149–160, 1904. With tables, showing evaporation secured from pulverized fuel and hand-fired coal.

Test of Pulverized Fuel. *Engineer* (U. S.), vol. 41, p. 259–260, 1904. Tests were made at the plant of the International Harvester Company.

Burning of Pulverized Coal, C. O. Bartlett. *Association of Engineering Societies, Jour.*, vol. 31, p. 44–48, 1903; *Railway and Engineering Review*, vol. 43, p. 568–569, 1903; *Engineer* (U. S.), vol. 50, p. 563–564, 1903. Paper read before the Civil Engineers' Club of Cleveland. Gives estimated cost of outfit for about 40 tons per day of ten hours.

Burning Powdered Coal under Boilers. *Power*, vol. 23, p. 434–437, 1903.

Powdered Fuel. *Power*, vol. 23, p. 561, 1903. Letter by W. E. Crane.

Pulverized Fuel. *Engineer* (U. S.), vol. 40, p. 272–275, 1903. Costs are given and an estimate of the saving made by pulverizing the coal.

Improved System of Burning Coal Dust. *Engineer* (U. S.), vol. 40, p. 93–94, 1903. The Rowe system.

A Rotary Brush System of Feeding Pulverized Fuel to Furnaces. *Engineering News*, vol. 47, p. 147, 1902. Test of Schwartzkopff system.

System for Burning Coal Dust. *American Miller*, vol. 30, p. 1006, 1902. Bartlett and Snow system.

Ueber den gegenwaertigen Stand der Kohlenstaubfeuerung, Haeussermann. *Gewerblich technischer Ratgeber*, vol. 1, p. 227–229, 1902.

Burning Coal Dust without Smoke. *Iron Age*, November 6, 1902, p. 10–12.

Pulverized Fuel for Power Plants, Gasche (Aero Pulverizer). *Railroad Gazette*, vol. 34, p. 446–467, 1902. Gives summary of results of boiler trials.

Kesselfeuerung mit pulverisierter Kohle (" Pulverisator cyclon," " Aero-Pulverisator "). *Leipziger Monatsschrift für Textil Industrie*, vol. 17, p. 479, 1902.

A New System for Burning Powdered Coal. *Engineering News*, vol. 48, p. 548, 1902. Rowe and Bender system.

The Rowe System of Burning Pulverized Coal. *Engineering Record*, vol. 46, p. 592, 1902.

Pulverized Coal Burning in Chicago. *American Electrician*, vol. 14, p. 13–14, 1902.

Pulverized Fuel for Power Plants. *Railroad Gazette*, vol. 24, p. 466–467, 1902. With tables giving summary of results of boiler trials, and heat balance for dust fuel test.

Kombinierte Kohlenstaubfeuerung. *Zeitschrift für Beleuchtungswesen* vol. 7, p. 332–333, 1901.

Kohlenstaubfeuerungen, Ruhl. *Kraft*, vol. 18, pt. 1, p. 35–37, 1901.

Powdered Fuel for Boiler Furnaces at the Alpha Cement Company's Works, Alpha, N. J. *Engineering News*, vol. 45, p. 452–453, 1901.

A New Method of Burning Powdered Fuel. *Engineering News*, vol. 45, p. 178–179, 1901. Description of Westlake system, with results of tests.

The Aero System of Pulverized Fuel Combustion. *Engineering Record*, vol. 43, p. 506, 1901.

Pulverized Fuel, R. A. Douglas. *American Electrician*, vol. 13, p. 434–435, 1901.

Two Recent Systems for Burning Powdered Coal. *Engineering News*, vol. 46, p. 415–416, 1901. Cyclone and Aero Pulverizer systems.

Freitag's Kohlenstaub-Feuerung. *Kraft*, vol. 17, p. 5–6, 1900.

Burning of Pulverized Coal. *Engineering Record*, vol. 42, p. 241–242, 1900. Editorial note on the use of pulverized coal in rotary cement kilns.

Burning Pulverized Coal. *Railway and Engineering Review*, vol. 40, p. 560–562, 1900.

Burning Powdered Coal in Stationary Boilers. *Engineering Record*, vol. 42, p. 615–616, 1900. Tests with Westlake apparatus.

Emploi du charbon pulverise dans les foyers des chaudieres et des fours metallurgique (système Schwartzkopff), A. Halleux. *Revue Universelle des Mines*, vol. 46, p. 21–34, 1899.

Kohlenstaubfeuerungen (Zusammenstellung der verschiedenen Erfindungen und Patente). *Schweizerische Bauzeitung*, vol. 34, p. 4–6, 1899.

Use of Coal Dust as Fuel for Boilers, Count Caracristi. *Iron and Coal Trades Review*, vol. 58, p. 643, 1899.

Die Freitagsche Kohlenstaubfeuerung, L. Kaufmann. *Zeitschrift des Vereines deutscher Ingenieure*, vol. 43, p. 988–992, 1899.

The Utilization of Coal Sludge and Coal Dust. *Colliery Guardian*, vol. 77, p. 477, 1899. Abstract from *Neues Saarbrueckener Gewerbeblatt.*

Freitag Apparatus for Coal Dust Fuel. *Colliery Guardian*, vol. 78, p. 542–543, 1899. Abstract of article by L. Kaufmann in *Zeitschrift des Vereines deutscher Ingenieure.*

Burning Low-priced Fuel, W. H. Wakeman. *American Machinist*, vol. 22, p. 101, 1899.

Ueber Verwerthung von Kohlenschlamm und Kohlenstaub. *Oest. Zeitschrift für Berg u. Hüttenwesen*, vol. 57, p. 127–129, 1899. Abstract in *Institution of Civil Engineers, Proc.*, vol. 136, p. 421–422, 1898–1899.

Chauffage des Chaudieres au charbon pulverise (système F. Forst). *Revue Industrielle*, vol. 29, p. 16, 1898.

New Coal Dust Furnaces. *Iron and Coal Trades Review*, vol. 47, p. 177–178, 1898. Pinther, Russell, Lester & Ernst, Peek and Patterson systems.

Versuchsergebnisse der De Campschen Kohlenstaubfeuerungen, Schneider. *Mitteilungen aus der Praxis des Dampfkessel und Dampfmaschinenbetriebes*, vol. 20, p. 76, 1897.

Novelties in Coaldust Firing Apparatus. *Colliery Guardian*, vol. 76, p. 514, 1898. Abstract from *Tonindustrie Zeitung*.

Ruhe's Apparatus for Burning Powdered Coal. *Engineering* (Lond.), vol. 63, p. 72, 1897.

Burning Powdered Coal under Steam Boilers. *Engineering News*, vol. 38, p. 189–190, 1897. Wegener system.

Neuerungen an Kohlenstaubfeuerungen. *Dingler's Polytechnische Journal*, vol. 305, p. 272–276, 1897.

Chauffage au Pulverin de Charbon, Vacquiers. *La Vie Scientifique*, 1897, pt. 1, p. 253–254.

Chauffage des Chaudieres au Charbon Pulverise, P. Chevillard. *Revue Industrielle*, vol. 28, p. 162, 294, 385, 1897.

Die Verwendung der Kleinkohle, Moriz Caspaar. *Oest. Zeitschrift für Berg u. Hüttenwesen*, vol. 45, p. 373, 401, 1897.

Kohlenstaubfeuerung und Vermahlung der Kohle, Warlich. *Dampf*, vol. 41, pt. 1, p. 49–51 (1897).

Ruhl's Apparatus for Burning Powdered Coal. *Engineering*, vol. 63, p. 71–73, 1897.

Fortschritte auf dem Gebiet der Kohlenstaubfeuerung, Schütze. *Dampf*, vol. 13, p. 1205, 1896.

Kohlenstaubfeuerung Apparat, Schütze. *Uhlands Techniche Rundschau*, 1896, No. 3, p. 55.

Kohlenstaubfeuerung (System Unger). *Tonindustrie Zeit.*, vol. 20, p. 861, 1896.

Kohlenstaubfeuerung nach System Cornelius (Deutsches Reich-Patent, 78, 587). *Glaser's Annalen für Gewerbe und Bauwesen*, vol. 39, p. 139–140, 1896.

Kohlenstaubfeuerungen im Dampfkesselhause des Koeniglichen Opernhauses in Berlin (Patent Ruhl). *Centralblatt der Bauverwaltung*, vol. 16, p. 59, 1896.

Powdered Coal as Fuel. *Marine Engineer*, vol. 17, p. 433, 1896.

Economic Value of Coal Dust, W. Blakemore. *Canadian Mining Review*, vol. 15, p. 200–201, 1896. Paper read before Ontario Mining Institute.

Combustion of Powdered Coal. *Engineering* (Lond.), vol. 61, 80–81,

1896. Experiments made by Mr. Bryan Donkin with the Wegener apparatus.

Berlin Industrial Exhibition. *Engineer* (Lond.), vol. 82, p. 255, 1896. Brief description of coal-dust firing exhibit.

Wegener's Powdered Fuel Boiler Furnace and Apparatus. *Engineer* (Lond.), vol. 81, p. 485–486, 1896. A brief account of experiments made by Mr. Bryan Donkin.

Coal Dust Firing in the Iron Industry. *American Manufacturer and Iron World,* August 28, 1896, p. 300. Abstract from article by Victor von Neumann in the *Zeit. Oesterr. Ingen. u. Architekten Verein,* vol. 48, p. 342, 353, 1896. The Schwartzkopff apparatus is described.

Coal Dust Fuel. *Institution of Civil Engineers, Proc.,* vol. 123, p. 516–518, 1895–1896. Abstract of paper by C. Schneider in *Mittheilungen aus der Praxis des Dampfkessel und Dampfmaschinen Betriebes,* 1895, p. 336.

Firing with Coal-Dust and Coal Grinding Processes. *Institution of Civil Engineers, Proc.,* vol. 126, p. 473–474, 1895–1896. Abstract of article by Messrs. Zarniko and Propfe in *Gesundheits-Ingenieur,* 1896, p. 210.

Kohlenstaubfeuerungen, Ferdinand Bleichsteiner. *Oest. Zeitschrift für Berg und Hüttenwesen,* vol. 44, p. 237–240, 1896.

Kohlenstaubfeuerungen, Förster. *Uhlands Technische Rundschau,* 1896, No. 3, p. 24.

Kohlenstaubfeuerungen auf der Berliner Gewerbe-Ausstellung, 1896, Schmidt. *Gesundheits-Ingenieur,* vol. 19, 354, 1896.

Nachtheile der Kohlenstaubfeuerungen, Schneider. *Alkohol,* vol. 6, p. 117, 1896.

Kohlenstaubfeuerungen. *Zeit. des Vereines deutscher Ingenieure,* vol. 40, p. 432–436, 1896. Gives results of tests with different systems.

Versuche mit den Kohlenstaubfeuerungen von Schwartzkopff und Friedeberg. *Dampf,* vol. 13, p. 502, 1896.

Herstellung von Kohlenstaub fuer Kohlenstaubfeuerungen, Friedrich. *Dampf,* vol. 13, p. 710, 1896.

Apparatos para la combustion de carbones menudos, Colomer. *Revista Minera,* vol. 45, p. 175, 1895. Wegener, Friedberg and Schwartzkopff systems.

Die neueren Kohlenstaubfeuerungs-Apparate, B. Kosmann. *Stahl und Eisen,* vol. 15, p. 235–242, 1895.

Die Kohlenstaubfeuerung, Schneider. *Zeit. des Verbandes der Dampfkessel Ueberwachungs-Vereins,* vol. 18, 336, 1895.

Kohlenstaubfeuerungen, Schrey. *Glaser's Annalen für Gewerbe und Bauwesen,* vol. 36, p. 213–219; discussion, p. 219–220, 1895. Paper read before the *Verein deutscher Maschinen Ingenieure.*

Kohlenstaubfeuerungen von Schwartzkopff. *Oest. Zeitschrift für Berg und Hüttenwesen*, vol. 43, p. 187–188, 1895.

Die Schwartzkoppff'sche Kohlenstaub Feuerung, Schneider. *Zeit. Verband Dampfkessel Ueberwach, Ver.*, vol. 18, p. 403, 1895.

Versuchsergebnisse mit der Wegener'schen Kohlenstaubfeuerung. *Zeit. Verband Dampfkessel Ueberwach, Ver.*, vol. 18, p. 380, 1895.

Kohlenstaubfeuerungen. *Zeit. des Vereines deutscher Ingenieure*, vol. 39, p. 1379–1382, 1895. Abstract in *Engineer* (Lond.), vol. 81, p. 106, 1896. Gives historical sketch of the use of coal dust as fuel.

Chauffage des Chaudières au charbon pulverise (Système Baumert et Wegener). *Revue Industrielle*, vol. 25, p. 62–63, 1894.

Appareil Friedeberg pour bruler la poussiere de charbon, G. Lestang. *Revue Industrielle*, vol. 25, p. 461–462, 1894.

Apparatus for Burning Coal Dust (Friedeberg system). *Industries and Iron*, vol. 17, p. 354, 1894.

Staubkohlenfeuerung (Einrichtung und Versuche in der Inkrustatseinfabrik zu Ploetzensee). *Dampf*, vol. 11, p. 102, 1894.

Ueber Kohlenstaubfeuerungen. *Dampf*, vol. 11, p. 509, 1894.

Neuere Dampfkessel Kesselfeuerungen. *Dingler's Polytechnische Journal*, vol. 291, p. 241–247, 1894.

Ueber Kohlenstaubfeuerungen. *Dingler's Polytechnische Journal*, vol. 292, p. 265–270, 1894.

Friedeberg Apparatus for Burning Coal Dust. *Industries and Iron*, vol. 17, p. 405, 1894.

Die Kohlenstaubfeuerung Patents Friedeberg, B. Kosmann. *Berg u. Hüttenmannische Zeitung*, vol. 53, p. 371–374, 1894.

Neuere Kesselfeuerungen. *Dingler's Polytechnische Journal*, vol. 287, p. 108, 1893.

Kohlenstaubfeuerung von Baumert und Wegener. *Dingler's Polytechnische Journal*, vol. 289, p. 23, 1893. Paragraph on use by the North German Lloyd Company.

Meldrum Self-contained Dust-Fuel Furnace. Wm. Boby. *Federated Institution of Mining Engineers, Trans.*, vol. 3, p. 250–255, 1891–1892.

Steam Boilers with Forced Blast: The Perret system for burning dust and rejected fuels, with notes on testing boilers, Bryan Donkin. *Federated Institution of Mining Engineers, Trans.*, vol. 4, p. 154–166, 1892–1893. Discussion of papers by Wm. Boby and B. Donkin, p. 348–350.

Rauchlose Kohlenverbrennung (mittelst Staubkohle). *Mittheilungen aus dem Gebiete des Seewesens*, vol. 21, p. 63, 1893.

Foyers du Système de MM. Baumert et Wegener pour l'utilisation sous les chaudières de charbon pulverise. *Revue Universelle des Mines*, vol. 24, p. 238–241, 1893.

Ueber eine neue Feuerung (Patent Kudlicz) zum Verbrennen von Feinkohle, Kohlenloesche, Schlammkohle, Koksklein, Braunkohlenabfaellen und dergl, L. Glaser. *Glaser's Annalen für Gewerbe und Bauwesen*, vol. 33, p. 31–37, 1893.

On some Appliances for the Utilization of Refuse and Dust Fuel, Walter G. McMillan. *Society of Arts, Journal*, vol. 34, p. 527–540; discussion, p. 540–542, 1886. Various furnaces are described, and and results of tests with Perret's boiler furnace are given.

Powdered Anthracite and Gas Fuel. *Engineering News*, vol. 16, p. 314–315, 1886. Abstract from report of Scranton Board of Trade.

Perret's Furnace for Dust Fuel. *Iron Age*, December 10, 1885, p. 35.

On the Conversion of Heat into Useful Work, William Anderson. *Society of Arts, Journal*, vol. 33, p. 643–656, 1885. The author describes Crampton's system of coal-dust burning for a revolving puddling furnace, also the same system adapted to marine boilers.

The Utilization of Coal Dust as Fuel. *Engineering News*, vol. 10, p. 163, 1883.

Coal Dust Fuel. *Engineer* (Lond.), vol. 43, p. 335–336, 1877. Gives results of experiments with Stevenson's apparatus.

On the Use of Pulverized Fuel, B. F. Isherwood. *Engineering and Mining Journal*, vol. 21, p. 12, 31, 57, 104, 129, 1876. An account of experiments made at South Boston, with the Whelpley and Storer apparatus. In addition, the author gives a sketch of the history of pulverized coal burning, beginning with the English patent of J. S. Dawes in 1831.

Notes sur les dangers que parait presenter la poussiere de houille dans les mines, même en l'absence de grison. *Annales des Mines, Mémoires*, Ser. 7, vol. 7, 176–179, 1875.

On the Combustion of Powdered Fuel in Revolving Furnaces, and its Application to Heating and Puddling Furnaces, T. R. Crampton. *Iron and Steel Institute, Journal*, 1873, p. 91–101; discussion, p. 101–107.

On the Use of Pulverized Fuel, Lieut. C. E. Dutton. *Franklin Institute, Journal*, vol. 81, p. 377; vol. 92, p. 17, 1871. Whelpley and Storer process.

Four Crampton, M. Lavalley, *Société des Ingénieurs Civils de France, Mémoires*, 1875, p. 266–272; discussion, p. 272–278.

BOOKS AND PAMPHLETS

BARR, WILLIAM M. A Practical Treatise on the Combustion of Coal, including descriptions of various mechanical devices for the economic generation of heat by the combustion of fuel, whether solid, liquid or gaseous. *Indianapolis, Yohn Bros.*, 1879. Chapter 14—Coal dust fuel. An account of experiments made by the U. S. Government in 1876. Comparative economy of powdered fuel as compared with ordinary coal. Stevenson's apparatus for burning coal dust.

BERTIN, L. E. Marine Boilers. Translated and edited by Leslie S. Robertson. Ed. 2. *New York, Van Nostrand*, 1906, p. 114–120.

BOURNE, JOHN. A Treatise on the Steam Engine. *New York, Appleton*, 1866, p. 358. The author considers that coal-dust burning in locomotives would be feasible, but details had not been worked out.

CLARK, D. KINNEAR, editor. Fuel: its combustion and economy, consisting of abridgments of " Treatise on the Combustion of Coal and Prevention of Smoke," by C. W. Williams, and " The Economy of Fuel," by T. Symes Prideaux, with extensive additions on recent practice in the combustion and economy of fuel, coal, coke, wood, peat, petroleum, etc. *Lond., Crosby, Lockwood; New York, Van Nostrand*, 1879. Chapter 25—Powdered Fuel.

DAMOUR, EMILIO, AND QUENEAU, A. L. J. Industrial Furnaces. *New York, Engineering and Mining Journal*, 1906, p. 275–286. Contains list of U. S. Patents covering the stoking of powdered fuel to May 10, 1904.

FOWLER, WILLIAM H. Steam Boilers and Supplementary Appliances. *Manchester, Scientific Pub. Co.*, p. 491–492, paragraph on dust fuel stokers.

FULTON, CHARLES HERMAN. Principles of Metallurgy. *New York, McGraw-Hill Co.*, 1910, p. 422–424.

GEBHARDT, G. F. Steam Power Plant Engineering. Ed. 5. *New York, Wiley*, 1917, p. 80–9.

GROVES, CHARLES EDWARD, AND THORP, WILLIAM. Chemical Technology, vol. 1. Fuel and its Applications. By E. J. Mills and F. R. Rowan. *Philadelphia, Blakiston*, 1889, p. 364, 664.

HOFMAN, H. O. General Metallurgy. *New York, McGraw-Hill Book Co.*, 1913, p. 183–189. Mention is made of the early attempts to utilize coal dust as fuel, beginning with Niepce in 1818. A list of references is given.

HUTTON, FREDERICK REMSEN. The Mechanical Engineering of Steam Power Plants. Ed. 3. *New York, Wiley*, 1908. Chapter 9—Firing boilers with gas or liquid hydrocarbon or with pulverized fuel.

KENT, WM. Steam Boiler Economy. *New York, Wiley*, 1901, p. 132, 183.

PUETSCH, ALBERT. Gas and Coal Dust Firing: a critical review of the various appliances patented in Germany for this purpose since 1885; translated by Charles Salter. *London*, 1901.

THURSTON, R. H. A Manual of Steam Boilers, their design, construction and operation. *New York, Wiley*, 1888, p. 164–165. Paragraph on pulverized coal.

TURIN, ANDRÉ. Les foyers de chaudières. *Paris, Dunod & Pinat*, 1913, p. 156–161.

U. S. STEAM ENGINEERING BUREAU (NAVY DEPARTMENT). Annual Report, 1876. *Washington, Govt.*, 1876. Experiments were made under the direction of B. F. Isherwood, with a horizontal fire-tube boiler, at East Boston, Mass., to test the process of Whelpley and Storer for effecting the combustion of coal dust. The apparatus for grinding the coal was the only part of the process which was patented. The coal dust was blown upon a bed of ignited lump coal. Tables are given, showing the comparative economy of burning lump coal alone, or lump coal with coal dust. It was found that the use of powdered fuel was more expensive, on account of the cost of pulverization.

CANADA. Commission of Conservation Committee on Minerals. Pulverized fuel, its use and possibilities, 57 pp., 1919. Ottawa, Canada, 1919.

HARVEY, L. C. Pulverized coal systems in America, 65 pp., 1919. Department of Scientific and Industrial Research. London, 1919. Bibliography, p. 58–65.

INDEX